PRODUCT DETAILS
ARTICLE: 17867

WHEEL P 150X48/60 HEAVY DUTY BB SWL P60 FORK



Wheel series P

Monolitic polyammide 6 wheels available with standard shielded or stainless steel precision ball bearings; standard or stainless steel roller bearing; plain bore.
Wheel fitted with ball bearings.

Castor series P60

P60 series, heavy duty pressed steel forks, swivel with hardened steel double races & 'water resistant' protections. Finish: zincplated.

Technical data

Wheel diameter	D	150 mm
Tyre width	E	48,0 mm
Bearing seat diameter	s	47 mm
Bore diameter	d	20 mm
Outer faces bearings distance	V	54 mm
Weight article		3,570 kg
Hub width	L	60 mm
Overall height	H	203 mm
Top plate outer dimensions	AxB	135x110 mm
Bolt hole spacing	axb	105x75 mm
Bolt hole spacing	axb	105x80 mm
Fixing bolt diameter	g	M12
Offset	F	64 mm
Fork width	U	60 mm
Load Capacity		850 kg

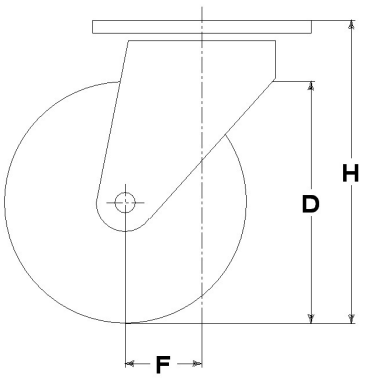

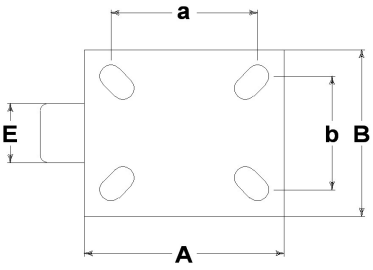

Related Articles

Spare part wheel: 18011CC
Version with thread-guards: 17867PF
Version with footguard: 17867PP
Version with trailing brake: 17867FR
Version with trailing brake and thread-guards: 17867FRPF
Version with trailing brake and footguard: 17867FRPP
Version with leading brake: 17867FV
Version with leading brake and thread-guards: 17867FVPF
Version with leading brake and footguard: 17867FVPP

GENERAL INFORMATION / RECOMMENDATIONS AND WARNINGS
The cited text and the complete catalogue in their most up-dated versions are available in the OEM's website page www.lagspa.it/downloads. The dimensions, descriptions, specifications and illustrations herein are indicative and subject to variations without notice. The fact that products are illustrated herein does not necessarily imply they are available from stock nor does it place us under any obligation to supply them.
Tests carried out refer to the original products with original accessories: the replacement of one of the components with others of different manufacture might prevent the same results from being achieved and will automatically invalidate any guarantee. Please contact our technical service concerning any special application.