E12333

Connecting cable with plug

ASTGH040MSS0010C04

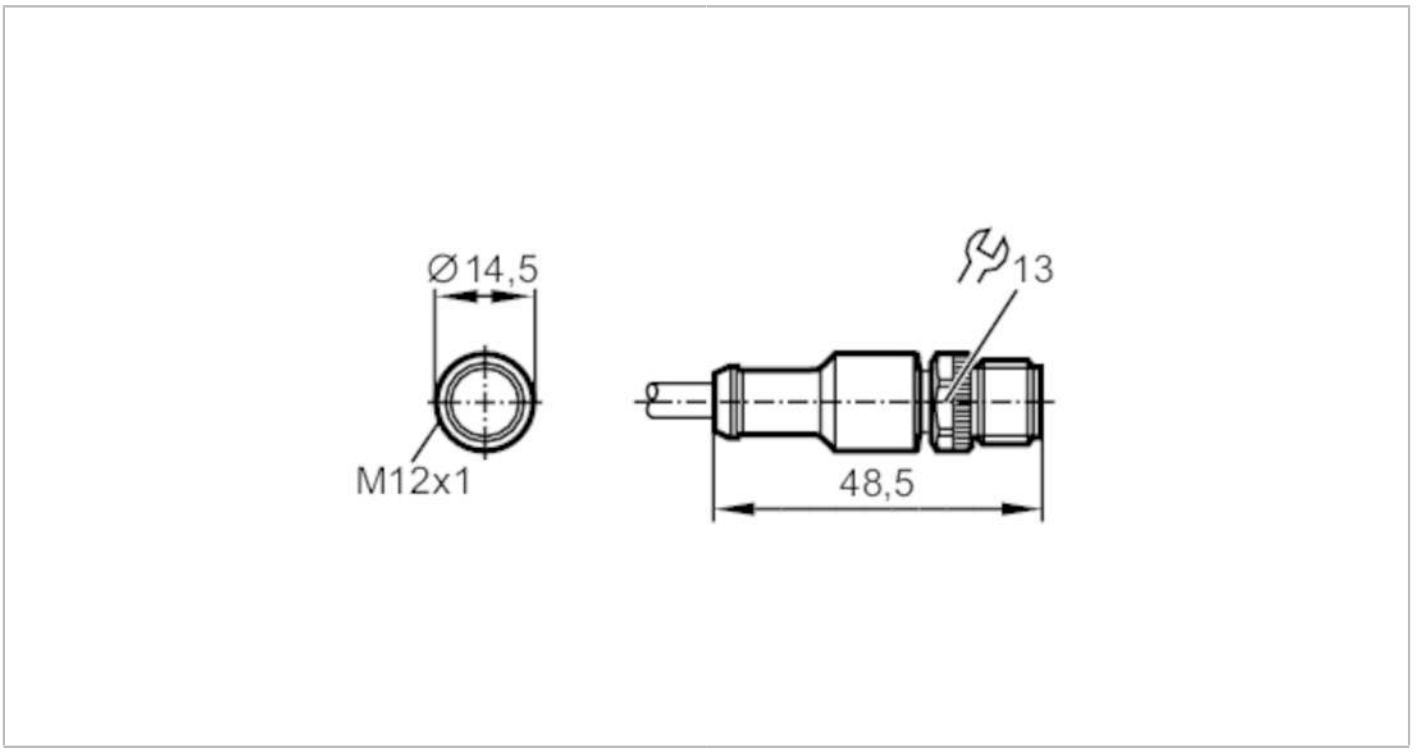

Application		
Special feature		Free from silicone; Halogen-free; Gold-plated contacts; Screened cable
Free from silicone		yes
Electrical data		
Operating voltage	[V]	< 50 AC / < 60 DC
Protection class		III
Max. current load total	[A]	4
Operating conditions		
Ambient temperature	[°C]	-25...90
Protection		IP 68
Mechanical data		
Weight	[g]	386.2
Dimensions	[mm]	14.5 x 14.5 x 48.4
Materials		PUR
Moulded-body material		PUR
Material nut		diecast zinc, nickel-plated
Remarks		
Pack quantity		1 pcs.

E12333

Connecting cable with plug

ASTGH040MSS0010C04

Electrical connection

Cable: 10 m, PUR, Halogen-free, black, Ø 5 mm, shielded; 4 x 0.34 mm² (42 x Ø 0.1 mm)

Electrical connection - plug

Connector: 1 x M12, straight; coding: A; Moulded body: PUR; Locking: diecast zinc, nickel-plated; Contacts: gold-plated; Tightening torque: 0.7...0.9 Nm; Shielded connection cable: screen not connected



Connection

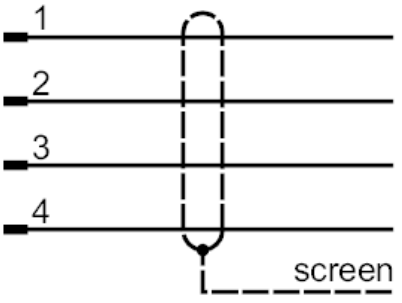

	Core colours :
BK =	black
BN =	brown
BU =	blue
WH =	white