Product data sheet
Characteristics

XY2CE2A297
e-stop rope pull switch XY2CE - LH side - 2NC +2NO - pilot light 230V - boot. pb



Main

Range of product	Preventa XY2
Product or component type	Latching emergency stop rope pull switch
Device short name	XY2CE
Housing colour	Red RAL 3000
Overvoltage category	Class I conforming to EN/IEC 61140 Class I conforming to NF C 20-030

Complementary

Local signalling	With pilot light, yellow, 230 V
Number of cables	1
Trigger cable maximum length	70 m
Body material	Zamak
Cover material	Stainless steel
Reset	By booted push-button
[Us] rated supply voltage	230...240 V AC
Contacts type and composition	2 NC + 2 NO
Contact operation	Slow-break
Trigger cable anchor point	LH side
Light block supply	Direct
Connections - terminals	Screw clamp terminal 1 x 0.5...2 x 1.5 mm²
Tightening torque	0.8...1.2 N.m
Cable entry number	3 plain hole for Pg 13.5 or ISO M20 cable gland
Safety level	Can reach category 4 with the appropriate monitoring system and correctly wired conforming to EN/ISO 13849-1 Can reach PL = e with the appropriate monitoring system and correctly wired conforming to EN/ISO 13849-1 Can reach SIL 3 with the appropriate monitoring system and correctly wired conforming to EN/IEC 61508

Disclaimer: This documentation is not intended as a substitute for and is not to be used for determining suitability or reliability of these products for specific user applications

Safety reliability data	B10d = 300000 with value given for a life time of 20 years limited by mechanical or contact wear conforming to IEC 60947-5-5
Marking	CE
Mechanical durability	60000 cycles
Distance between cable supports	5 m
[Ie] rated operational current	3 A at 240 V AC-15, A300 conforming to EN/IEC 60947-5-1 appendix A 0.27 A at 250 V DC-13, Q300 conforming to EN/IEC 60947-5-1 appendix A
[Ithe] conventional enclosed thermal current	10 A
[Ui] rated insulation voltage	300 V (degree of pollution: conforming to UL 508 300 V (degree of pollution: conforming to CSA C22.2 No 14 400 V (degree of pollution: 3) conforming to EN/IEC 60947-1
[Uimp] rated impulse withstand voltage	6 kV conforming to EN/IEC 60947-1
Positive opening	With conforming to EN/IEC 60947-5-1
Resistance across terminals	<= 25 MOhm conforming to NF C 93-050 method A <= 25 MOhm conforming to EN/IEC 60255-7 category 3
Short-circuit protection	10 A by gG cartridge fuse conforming to EN/IEC 60269
Terminals description ISO n°1	(13-14)NO (21-22)NC
Product weight	1.47 kg

Environment

Standards	EN/IEC 60204-1 EN/IEC 60947-5-5 EN/IEC 60947-5-1 CSA C22.2 No 14 UL 508 Machinery directive 2006/42/EC EN/ISO 13850 Work equipment directive 2009/104/EC
Product certifications	UL for category NISD emergency stop devices CSA CCC
Protective treatment	TC
Ambient air temperature for operation	-25...70 °C
Ambient air temperature for storage	-40...70 °C
Vibration resistance	10 gn (f = 10...300 Hz) conforming to EN/IEC 60068-2-6
Shock resistance	50 gn for 11 ms conforming to EN/IEC 60068-2-27
IP degree of protection	IP66 for conforming to IEC 60529

Offer Sustainability

Sustainable offer status	Green Premium product
RoHS (date code: YYWW)	Compliant - since 0852 - Schneider Electric declaration of conformity Schneider Electric declaration of conformity
REACh	Reference not containing SVHC above the threshold Reference not containing SVHC above the threshold
Product environmental profile	Available Product environmental
Product end of life instructions	Need no specific recycling operations

Contractual warranty

Warranty period	18 months

XY2CE2A297

Dimensions

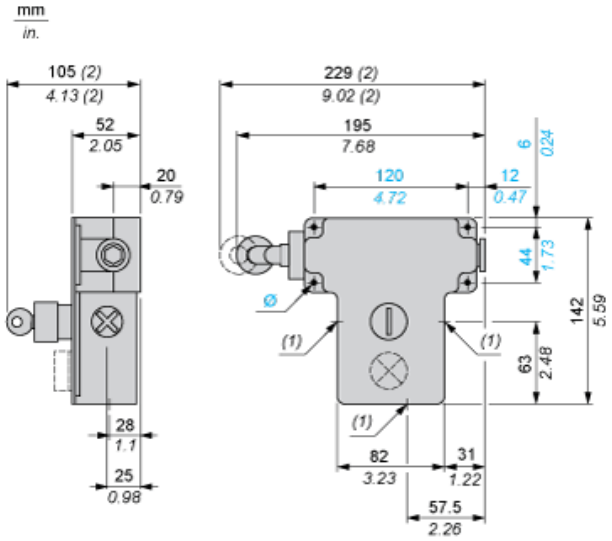

(1) 3 plain holes for Pg 13.5 cable gland.
(2) Maximum extension.
Ø 4 elongated holes Ø 6 mm/0.24 in.

XY2CE2A297

Electrical Curves

AC Supply 50/60 Hz Inductive Circuit

2-pole Contact Block

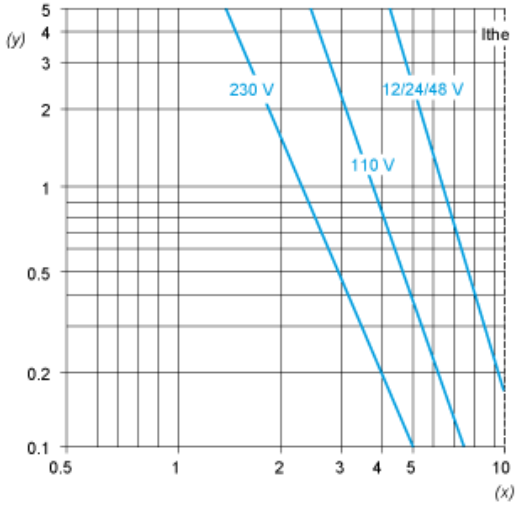

Y Millions of operating cycles
X Current in A

DC Supply Power Broken in for 1 Million Operating Cycles Inductive Circuit

Voltage	V	24	48	120
	W	13	9	7