Microsoft Phone MP54

Yealink MP54 Android 9-based phone owns a faster response speed and dedicated Teams button, is ideal for office workers, front desks and common areas. Presenting a standalone voice solution and an unparalleled audio clarity, the MP54 is armed with Yealink's Optima HD Voice and Yealink Noise Proof Technology. Moreover, MP54 makes the collaboration easier than ever thanks to its support for SIP&Teams Hybid mode, and its USB port for a Wi-Fi, Bluetooth and a USB headset.

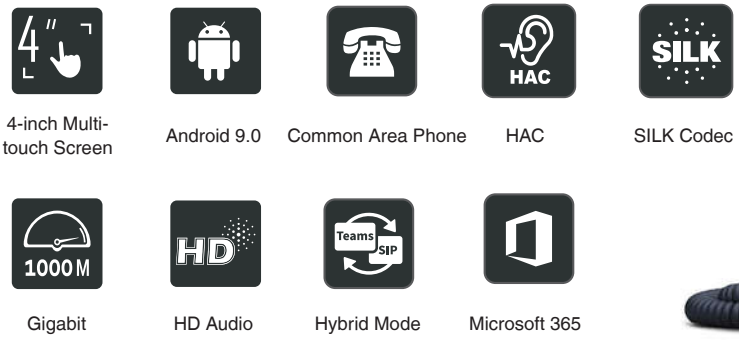

4-inch Multi-touch Screen | Android 9.0 | Common Area Phone | HAC | SILK Codec

Gigabit | HD Audio | Hybrid Mode | Microsoft 365



Key Features and Benefits

Excellent Calling Experience

The MP54 combines professional hardware and software technology to deliver crystal-clear voice communications. Thanks to Yealink Optima HD voice and Noise Proof Technology as well as a full-duplex hands-free speakerphone with AEC and a HAC handset, the MP54 provides an excellent audio experience for more efficient and productive calls.

Ease of Use

To extend workflows seamlessly to the desktop device, the MP54 offers a 4.0-inch capacitive touch screen and fully compatible with Microsoft 365 for a consistent calling and meeting user interface. The device owns one USB 2.0 port for USB headsets and Bluetooth dongle. It allows the user to leave the desk and continue talking while paring with a Bluetooth headset or USB headset.

Simplify Deploy and Manage

The MP54 offers deployment flexibility with multiple choices of deployment tools from Microsoft, Yealink and Unify square as well as auto-provision, making it simple to deploy, administer, upgrade and maintain.

- Android 9.0
- 4 inch (800 x 480) Capacitive Touch Screen
- Optimal HD audio, Yealink Noise Proof Technology
- Dedicated Microsoft Teams Button
- Supports Upgradability of Firmware to Teams and SfB Edition
- Magnet Handset
- Bluetooth Headset via BT41
- Wi-Fi via WF50
- USB Type A port, Supports USB Headset
- Dual-port Gigabit Ethernet, Supports PoE
- Supports Microsoft/Yealink/Unify Square Device Management Platform
- Hybrid mode (Teams version only)

Yealink

Specifications

Audio Features

- HD voice: HD handset, HD speaker
- Hearing aid compatible (HAC) handset, magnet handset
- Yealink Noise Proof Technology
- Audio codec: SILK, Opus, G.722, G.722.1, G.722.1C, G.711 (A/μ), G.723, G.726, G.729AB, iLBC
- Full-duplex hands-free speakerphone with AEC
- VAD, CNG, AEC, PLC, AJB, AGC

Phone Features

- Call controls
  - Call hold/Call mute/Call transfer/Call forward
  - Visual voicemail
  - Synchronized call logs
- Meeting call controls
  - Mute/unmute, hold/resume
  - Hang up
  - Add/remove participant
  - Join Skype for Business meetings
- Phone lock/unlock
- Emergency calls
- Hot desking
- Accessibility
- Screensaver, Power saving
- Common Area Phone (CAP)
- Teams & SIP Hybrid mode (Teams version only)

Display and Indicator

- LCD screen:
  - 4” 480×800 capacitive touch screen
  - Two-angle [45°/ 53°] stand
  - 5 points multi-touch surface
- Dark theme
- Multi-language user interface
- Full keyboard
- LED for call and message waiting indication
- Dedicated Teams button
- Presence integration

Interface

- Dual-port Gigabit Ethernet
- Power over Ethernet (IEEE 802.3af), class 3
- 1 x USB Type A port
  - USB headsets
  - Bluetooth headset (Only with Dongle)
  - Wi-Fi (Only with Dongle)
- 1 x Security lock port
- 1 x RJ9 (4P4C) handset port
- 1 x RJ9 (4P4C) headset port

Management

- Configuration: Browser/Phone/Auto Provisioning and Device Management Platform
- Provisioning priority management
- Auto Provisioning via Activation Code
- Yealink Redirection and Provisioning Service (RPS)
- QoE (Monitoring Reports)
- Reset to factory, reboot
- Package tracing export, system log
- Screenshot via URL
- Supports Microsoft Device Management Platform
- Supports Yealink Device Management Platform (YMDP/YMCS)
- Supports Unify Square Device Management Platform

Network and Security

- IPv4/IPv6
- IP Assignment: Static/DHCP
- Proxy mode
- HTTP/HTTPS web server
- Time and date synchronization using SNTP
- Transport Layer Security (TLS)
- HTTPS certificate manager
- Digest authentication using MD5/MD5-sess
- IEEE802.1X

Other Physical Features

- Color: Classic Grey
- External Yealink AC adapter (optional):
  AC 100~240V input and DC 5V/2A output
- USB output currency: 5V ⎓ 500mA
- Power consumption (PSU): 1.7w~5.3w
- Power consumption (PoE): 2.3W~6.8W
- Dimension (W*D*H*T): 223mm*159mm*127mm*36mm
- Operating humidity: 10~95%
- Operating temperature: -10~50°C (+14~122°F)

Package Features

- Package content:
  - Yealink MP54 IP phone
  - Handset with handset cord
  - Ethernet Cable (2m CAT5E FTP Cable)
  - Stand
  - Quick Start Guide
  - Power Adapter (Optional)
- Qty/CTN: 5 PCS
- N.W/CTN: 4.8kg
- G.W/CTN: 5.3kg
- Giftbox size: 249mm* 179mm* 103mm
- Carton Meas: 529mm* 188mm* 261mm

Compliance

ISO 9001 REACH

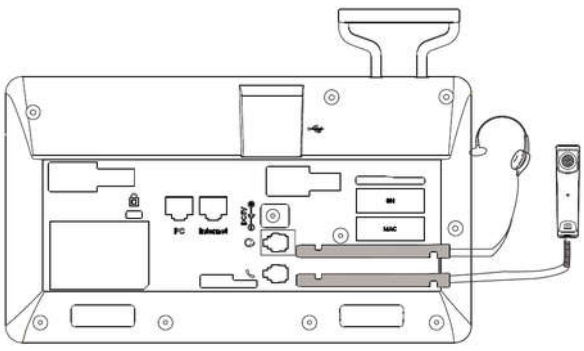

About Yealink

Yealink is a global leading provider of enterprise communication and collaboration solutions, offering video conferencing service to worldwide enterprises. Focusing on research and development, Yealink also insists on innovation and creation. With the outstanding technical patents of cloud computing, audio, video and image processing technology, Yealink has built up a panoramic collaboration solution of audio and video conferencing by merging its cloud services with a series of endpoints products. As one of the best providers in more than 140 countries and regions including the US, the UK and Australia, Yealink ranks No.1 in the global market share of SIP phone shipments.

Copyright

Copyright © 2020 YEALINK(XIAMEN) NETWORK TECHNOLOGY CO., LTD.

Copyright © 2020 Yealink(Xiamen) Network Technology CO., LTD. All rights reserved. No parts of this publication may be reproduced or transmitted in any form or by any means, electronic or mechanical, photocopying, recording, or otherwise, for any purpose, without the express written permission of Yealink(Xiamen) Network Technology CO., LTD.

Technical Support

Visit Yealink WIKI (http://support.yealink.com/) for firmware downloads, product documents, FAQ, and more. For better service, we sincerely recommend you to use Yealink Ticketing system (https://ticket.yealink.com) to submit all your technical issues.

YEALINK(XIAMEN) NETWORK TECHNOLOGY CO.,LTD.
Web: www.yealink.com
Addr: No.1 Ling-Xia North Road, High Tech Park,
Huli District, Xiamen, Fujian, P.R.C
Copyright©2020 Yealink Inc. All right reserved.