ELECTRONIC TIMER

adjustable pulse generator
suitable for solenoid valves

Series **881**

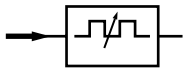



FEATURES

- *This electronic timer, which generates adjustable pulses, is particularly suited for automatic control of draining of an air dryer or compressor as, when energised, it can initiate operation of the solenoid valve for the time necessary for draining condensates at regular adjustable intervals*
- *Other applications include irrigation, air blasting etc.*
- *Fits directly to any solenoid valve with standardised ISO 4400 / DIN connection, between coil and power connector*

GENERAL / OPERATION

Converts a continuous power input into a succession of on-periods (ON), adjustable between 2 to 40 seconds and off-periods (OFF), adjustable between 0,5 to 45 minutes.

Input to timer



Output to solenoid valve

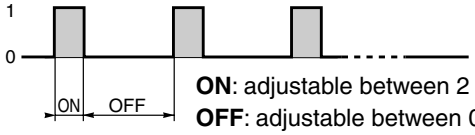

ON: adjustable between 2 and 40 seconds
OFF: adjustable between 0,5 and 45 minutes

CONSTRUCTION

Housing (1)	PA (polyamide)
Electrical connection	2 pins + earth to ISO 4400 for use with a connector to ISO 4400/EN 175301-803, form A (connector not supplied)
Agreement	CSA

ELECTRICAL CHARACTERISTICS

Standard voltages	24 V to 240 V DC or AC (50/60 Hz)
Max. inrush current	10 A during 10 ms
Consumption	4 mA max.
Repeatability	± 0,1%
Scale accuracy	± 10%

electrical connection	maximum power (I max. = 1A)	ambient temperature range	protection degree
ISO 4400	**24 VA** (with 24 V) to **240 VA** (with 240 V)	- 10°C to + 50°C	IP65

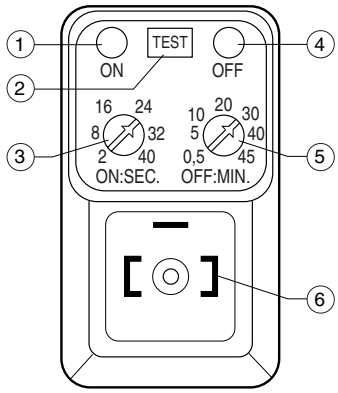

1. "Solenoid valve energised" light
2. Test button
3. Adjust on-period (ON)
4. "Solenoid valve de-energised" light
5. Adjust off-period (OFF)
6. ISO 4400 pin input connection

SPECIFICATIONS

description	catalogue number
Electronic timer with auxiliary manual control for solenoid valve with ISO 4400 pin coil	**88122627**

(1) The pin arrangement of the timer enables rotation by increments of 180°C in relation to the solenoid valve to which it is connected.

INSTALLATION

- If the width of the solenoid valve permits, the timer can be rotated about the connection axis by 180° increments
- Take care to fit properly the coil/timer seal and the connector seal
- Observe maximum power rating
- ISO 4400/EN 175301-803, form A, connection

DIMENSIONS (mm), WEIGHT (kg)

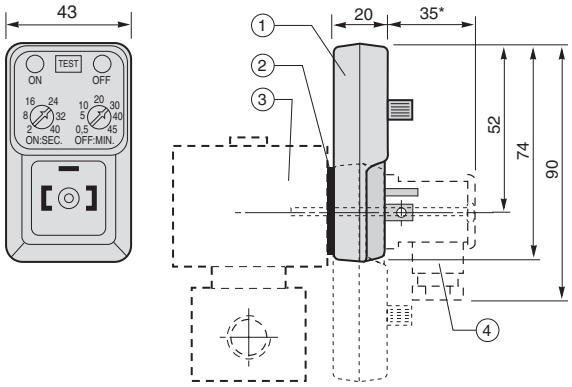

1. Timer rotatable by 180° increments
2. Seal
3. Solenoid valve with ISO 4400 standardised pin coil
4. ISO 4400 connector, Pg 11P, rotatable by 90° increments (not supplied)

* +15 mm pour déplacement du connecteur

Weight: 0,054 (without connector)

00146GB-2005/R02
ASCO/JOUCOMATIC reserves the right to alter the availability, design and specifications without notice.