Features

- *Smallest footprint 3.0 x 2.0 mm*
- *0.6 mm thickness*
- *High number of cycle*

Typical Applications

- *Wearable electronics*
- *In-Ear headphones, Earbuds*
- *Mobile Phones*
- *Portable Electronics*
- *Hearing Aids*

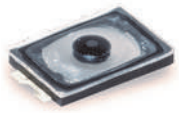

Specification

FUNCTION: momentary action
CONTACT ARRANGEMENT: 1 make contact = SPST, N.O.
TERMINALS: G type for SMT
TRAVEL: 0.13 mm ± 0.05 mm

Mechanical

	Operating force gf	Operating Life	Casing Color
KXT 311 LHS	100 ± 50	300,000	Black
KXT 321 LHS	160 ± 50	500,000	Black
KXT 331 LHS	240 ± 70	500,000	Black
KXT 341 LHS	330 ± 70	300,000	Black

Electrical

MAXIMUM VOLTAGE:	15 VDC
MAXIMUM CURRENT DC:	20 mA
DIELECTRIC STRENGTH:	(50/60 Hz, 1 min) 250 Vrms
CONTACT RESISTANCE:	≤ 500 mΩ
INSULATION RESISTANCE:	≥ 50 MΩ
BOUNCE TIME:	≤ 10 ms

Environmental

OPERATING TEMPERATURE:-40˚C to 85˚C
STORAGE TEMPERATURE: -40˚C to 85˚C

Process

SOLDERING: This component is suited to the following methods:
Infrared Reflow Soldering in accordance with IEC61760-1

Packaging

In reels of 8,500 pieces
Dimensions of reels according to EIA 481B
External diameter 330 mm

NOTE: Specifications listed above are for switches with standard options.
For information on specific and custom switches, consult Customer Service Center.

Part Number Description

For any part number different from those listed above, please consult your local representative.

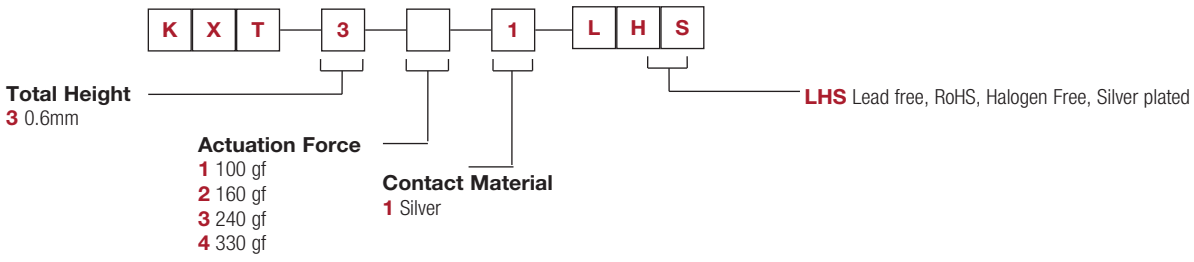

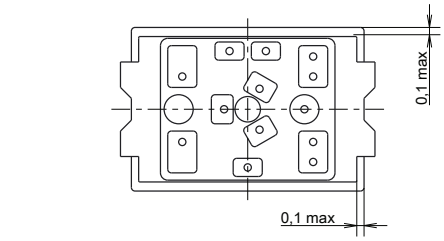

SCHEMATIC



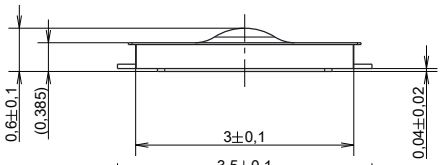

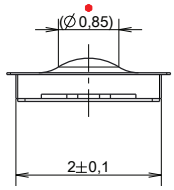

RECOMMENDED PCB LAYOUT

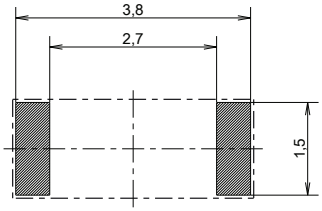

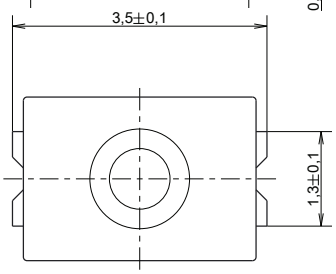

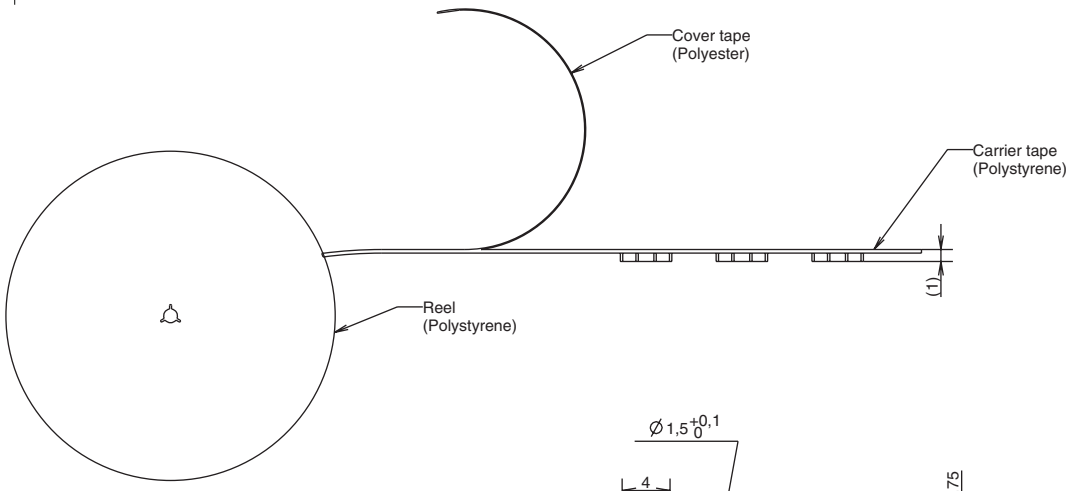

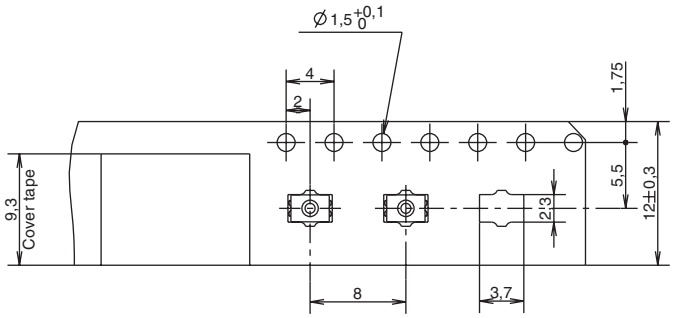

CARRIER TAPE

NOTE:

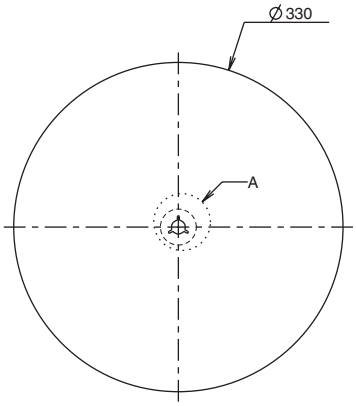

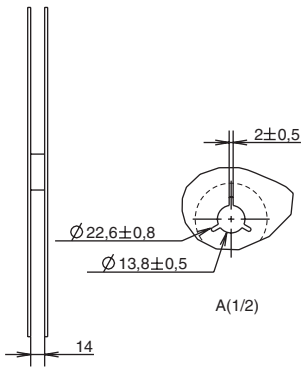

REEL