VARIMETER
Fuse Monitor
IL 9075, IP 9075, SL 9075, SP 9075

0221571


IL 9075


SL 9075

Function Diagram

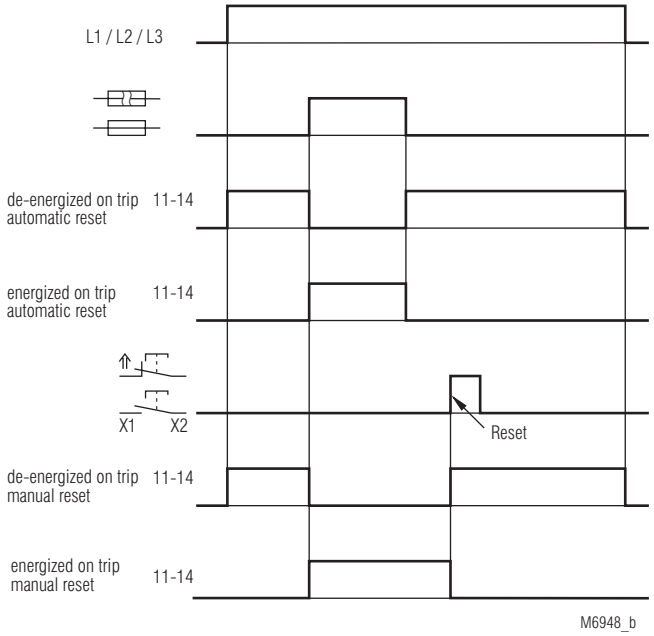

- According to IEC/EN 60 255-1
- Recognizes fuse failures in three-phase mains up to 3 AC 690 V
- Can be used for all types and sizes of fuses
- Independent of phase sequence
- Signals even if loads are switched off
- No malfunction on
  - asymmetrical mains
  - mains with harmonic waves
  - motors producing feedback
- Shorter response time than with motor circuit-breakers
- Green LED for intact fuses
- Red LED for fuse failure
- As option: energized / de-energized on trip in the case of IP 9075 programmable via X4-X5 or X3-X4
- As option: with manual reset function and remote reset, programmable via X1-X2
- As option: 1 NO contact or 2 changeover contacts
- Devices available in 2 enclosure versions:
  I-model: depth 59 mm, with terminals at the bottom for installation systems and industrial distribution systems according to DIN 43 880
  S-model: depth 98 mm, with terminals at the top for cabinets with mounting plate and cable duct
- IL 9075, SL 9075: width 35 mm
  IP 9075, SP 9075: width 70 mm

Approvals and Markings

CE cULus[1] A025518

[1] only IL 9075

Applications

Fuse monitoring in the three-phase mains, e.g. for automatic switching-off and switch-on blockage of three-phase motors in the event of one or more phase fuses failing.

Indicators

green LED:	for healthy fuse
red LED:	for blown fuse

Notes

The internal resistance of the fuse monitor's measuring path is in the MOhm range, meaning that the regulations as regards touch voltage are fulfilled if a fuse is not present or if it is faulty (IEC 974-1, internal resistance > 2000 Ohm/V).

Circuit Diagrams

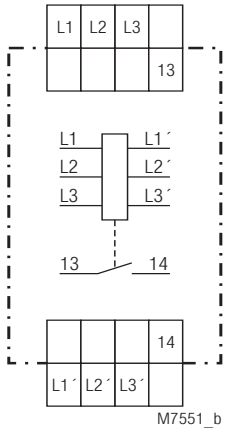

IL 9075.01,
SL 9075.01

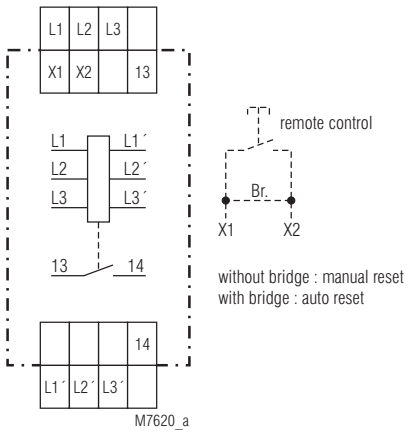

IL 9075.01/01_,
SL 9075.01/01_

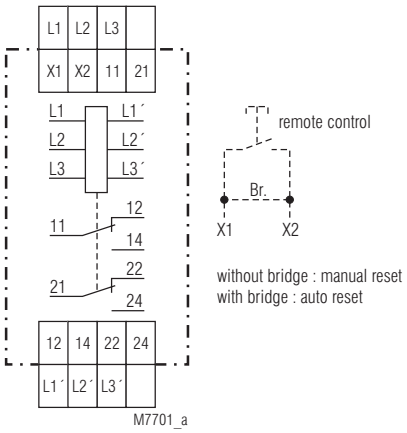

IL 9075.12/01_,
SL 9075.12/01_

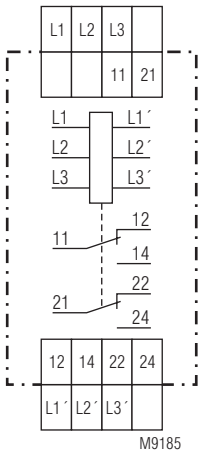

IL 9075.12/001,
SL 9075.12/001

Circuit Diagrams

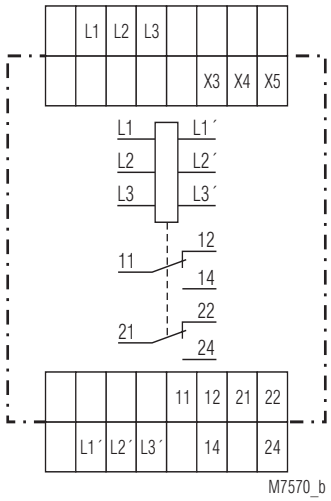

IP 9075.12, SP 9075.12

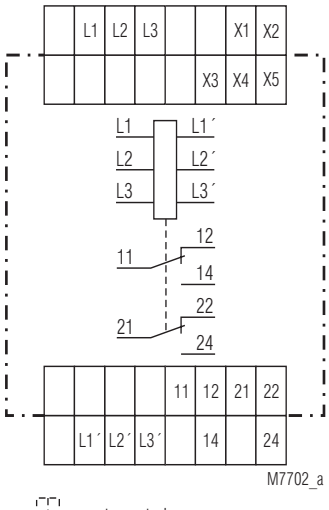

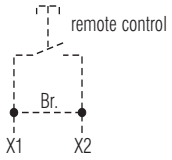

without bridge : manual reset
with bridge : auto reset

IP 9075.12/010, SP 9075.12/010

Connection Terminals

Terminal designation	Signal description
L1, L2, L3	Voltage before the fuses
L1´, L2´, L3´	Voltage after the fuses
X1, X2	Programming manual reset / reset
X3, X4, X5	Programming input energized / de-energized on trip
_ _ 9075.01: 11, 13	NO contact Rel. 1
_ _ 9075.12: 11, 12, 14	C/O contact Rel. 1
_ _ 9075.12: 21, 22, 24	C/O contact Rel. 2

Technical Data

Input

Nominal voltage U_N:

IL/SL 9075.01/_ _ _:	3 AC 110 ... 127 V 3 AC 220 ... 240 V 3 AC 380 ... 415 V 3 AC 400 ... 440 V
IL/SL 9075.12/_ _ _:	3 AC 110 V 3 AC 230 V 3 AC 400 V
IP 9075, SP 9075:	3 AC 480 ... 550 V, 600 ... 690 V
Voltage range:	0.8 ... 1.1 U_N
Nominal consumption:	
IL 9075, SL 9075:	2.0 VA (on L2 / L3)
IP 9075, SP 9075:	3.0 VA (on L1 / L2)
Nominal frequency:	50 ... 400 Hz
Internal resistance of the measuring paths:	> 2000 Ω/V
Permissible feedback:	max. 90 %

Output

Contacts

IL/SL 9075.01/ _ _ _ :	1 NO contact
IL/SL 9075.12/ _ _ _ :	2 changeover contacts
IP/SP 9075.12/ _ _ _ :	2 changeover contacts

Response/release time:

de-energized on trip

IL/SL 9075. _ _/001:	< 50 ms
IL/SL 9075. _ _/011:	< 50 ms
IP/SP 9075:	< 50 ms

energized on trip

IL/SL 9075. _ _ :	< 500 ms
IL/SL 9075. _ _ /010:	< 500 ms
IP/SP 9075:	< 500 ms
Output nominal voltage:	max. AC 250 V
Thermal current I_{th}:	4 A

Switching capacity

to AC 15

IL/SL 9075:

NO contact:	3 A / AC 230 V	IEC/EN 60 947-5-1
NC contact:	1 A / AC 230 V	IEC/EN 60 947-5-1
to DC 13:	1 A / DC 24 V	IEC/EN 60 947-5-1

IP/SP 9075:

NO contact:	3 A / AC 230 V	IEC/EN 60 947-5-1
NC contact:	1 A / AC 230 V	IEC/EN 60 947-5-1

Electrical life

to AC 15 at 1 A, AC 230 V

IL/SL 9075:	1.5 x 10^5 switching cycles
IP/SP 9075:	2.5 x 10^5 switching cycles

Short circuit strength

max. fuse rating:	4 A gL	IEC/EN 60 947-5-1
Mechanical life:	> 10^8 switching cycles	

Technical Data

General Data

Operating mode:	Continuous operation	
Temperature range:		
Operation:	- 20 ... + 60 °C	
Storage:	- 25 ... + 70 °C	
Altitude:	< 2.000 m	
Clearance and creepage distances		
rated rated impulse voltage voltage / pollution degree:	4 kV / 2	IEC 60 664-1
EMC		
Electrostatic discharge:	8 kV (air)	IEC/EN 61 000-4-2
HF irradiation		
80 MHz ... 1 GHz:	10 V / m	IEC/EN 61 000-4-3
1 GHz ... 2.7 GHz:	3 V / m	IEC/EN 61 000-4-3
Fast transients:	4 kV	IEC/EN 61 000-4-4
Surge voltages between		
wires for power supply:	2 kV	IEC/EN 61 000-4-5
between wire and ground:	4 kV	IEC/EN 61 000-4-5
HF wire guided:	10 V	IEC/EN 61 000-4-6
Interference suppression:	Limit value class B	EN 55 011
Degree of protection:		
Housing:	IP 40	IEC/EN 60 529
Terminals:	IP 20	IEC/EN 60 529
Housing:	Thermoplastic with V0 behaviour according to UL subject 94	
Vibration resistance:	Amplitude 0.35 mm, frequency10 ... 55 Hz	IEC/EN 60 068-2-6
Climate resistance:	20 / 060 / 04	IEC/EN 60 068-1
Terminal designation:	2 x 2.5 mm^2 solid or 2 x 1.5 mm^2 stranded ferruled DIN 46 228-1/-2/-3/-4	
Min. cross section:	0,6 mm	
Insulation of wires or sleeve length:	10 mm	
Wire fixing:	Flat terminals with self-lifting clamping piece	IEC/EN 60 999-1
Fixing torque:	0.8 Nm	
Mounting:	DIN rail (also available for screw mounting)	IEC/EN 60 715
Weight:		
IL 9075:	130 g	
SL 9075:	157 g	
IP 9075:	255 g	
SP 9075:	304 g	

Dimensions

Width x height x depth	
IL 9075:	35 x 90 x 59 mm
SL 9075:	35 x 90 x 98 mm
IP 9075:	70 x 90 x 59 mm
SP 9075:	70 x 90 x 98 mm

Standard Types

IL 9075.01/001 AC 380 ... 415 V 50 ... 400 Hz
Article number: 0041517
SL 9075.01/001 AC 380 ... 415 V 50 ... 400 Hz
Article number: 0054755

- De-energized on trip
- Automatic reset
- 1 NO contact
- Nominal voltage U_N: AC 380 ... 415 V
- Width: 35 mm

Variants

For rated voltages up to 3 AC 400 resp. 440 V:
IL 9075. _ _ : energized on trip, automatic reset
IL 9075. _ _ /001 : de-energized on trip, automatic reset
IL 9075. _ _ /010 : energized on trip, manual reset
IL 9075. _ _ /011 : de-energized on trip, manual reset

For rated voltages up to 3 AC 690 V,
open/de-energized on trip, settable:
IP 9075.12 : automatic reset
IP 9075.12/010 : manual reset or automatic reset settable

Ordering example for variants

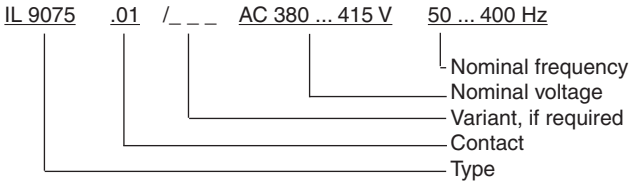

Connection Examples

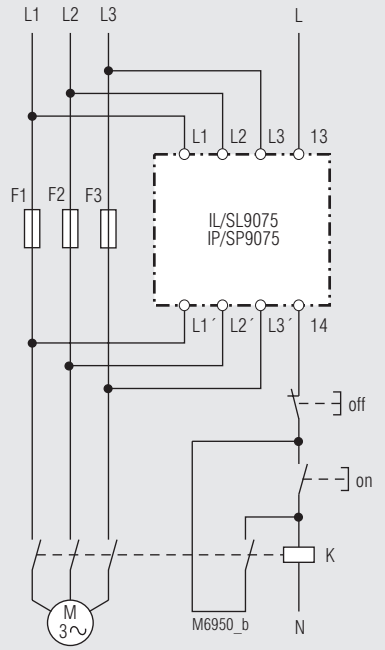

Fuse monitoring in the 2-phase mains, e.g. for motor protection with IL 9075/001 or with IP 9075, de-energized on trip, jumper X3-X4

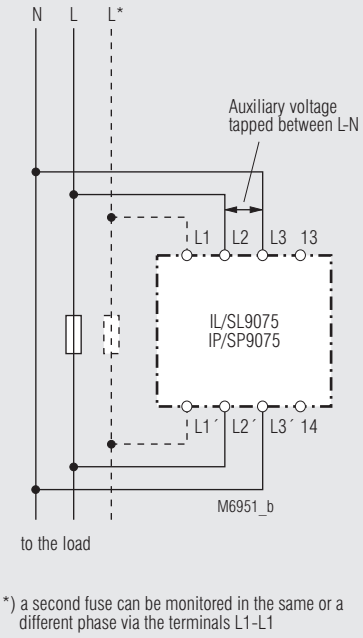

Fuse monitoring in the alternating current mains