Product Data Sheet

22mm Water Trap Tee Connector

John Guest



Applications	
Pneumatics	✓

The John Guest 22mm Water Trap Tee Connector has been developed to satisfy the compatibility needs of a wide range of applications.

Working Temperatures and Pressures

Potable Liquids and Air **10 Bar at 1°C** **10 Bar at 23°C** **7 Bar at 70°C**

Air **10 Bar at -20°C**

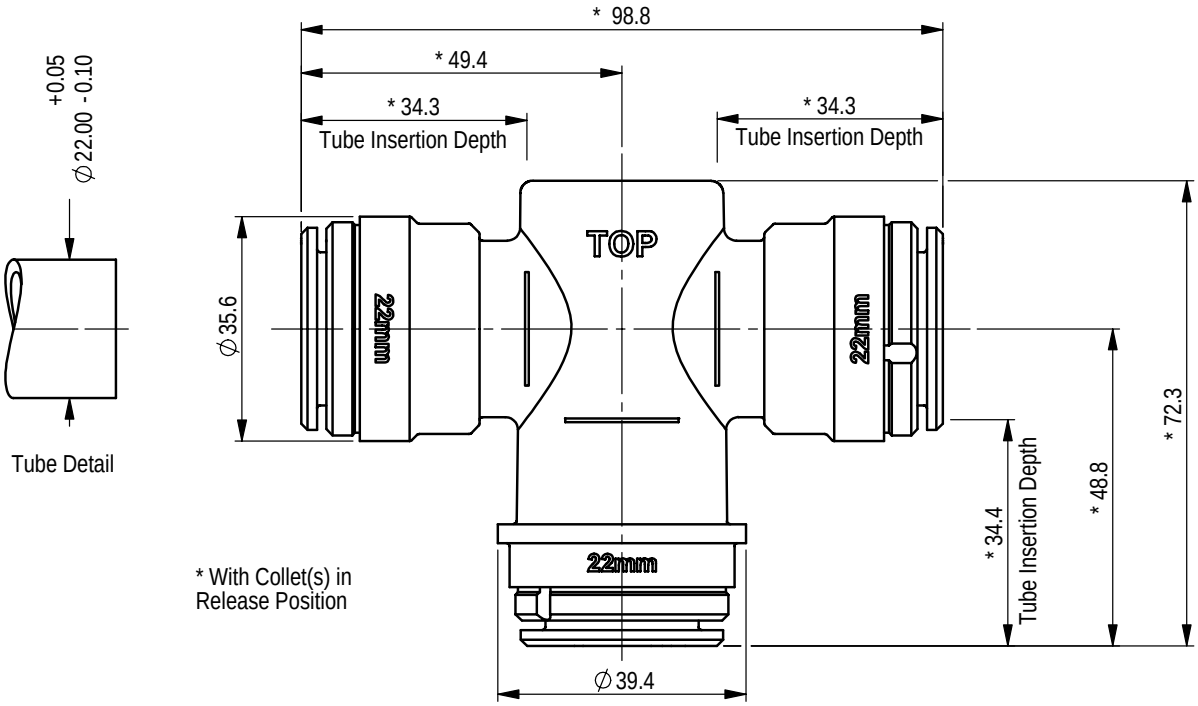

Part Description	Material
Body	Acetal Co-Polymer (Unfilled), Black
Water Trap Insert	Polypropylene (Unfilled), Natural
Collets	Acetal Co-Polymer (Unfilled), Black / Stainless Steel
'O' Rings	Nitrile, Black

All Dimensions in mm

THE COPYRIGHT IN THIS DRAWING AND THE PRODUCTS REFERRED THEREON BELONG TO JOHN GUEST INTERNATIONAL LIMITED AND THIS DRAWING NOR THE INFORMATION CONTAINED HEREIN SHALL BE PRODUCED IN ANY FORM OR USED FOR ANY PURPOSE WITHOUT WRITTEN CONSENT © 2007

The company has a policy of continuous research and development and reserves the right to amend without notice the specification and design of all products illustrated. For details of terms and conditions and any other technical enquiries, please contact our Customer Services Department.

ISSUE 1 SMD 03-05-07

DS-PMTT22E

JGE 2095/DS JAN 05

Product Data Sheet

22mm Water Trap Tee Connector

John Guest

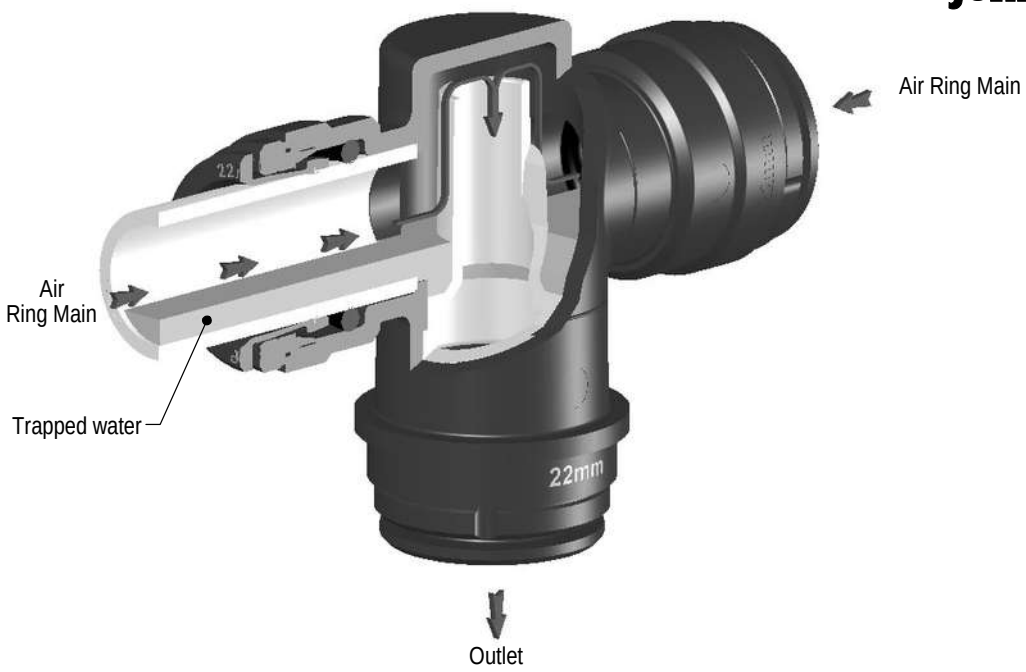

Application Area

The JG Water Trap Tee connector is intended for use in air line ring main circuits, as a more convenient, compact and elegant replacement to existing 'swan neck' connector systems.

Air line ring mains inherently cause condensation inside the ring main circuit. The JG Water Trap Tee inhibits the free flow of condensed water through the connector outlet with minimal head loss to the air flow. As with all air ring mains, the residual water within the system should be vented regually to ensure minimal water build up. Outlets not protected by a water trap will allow water to collect in the outlet pipes, potentially causing extensive and costly damage to equipment.

Installation

It is of vital importance to the correct function of the Water Trap Tee, that the air ring main within which the connector is installed is near horizontal and that the outlet port faces vertically downwards. Markings to indicate correct orientation have been moulded onto the connector body.

Connection

Pipes should be cut squarely and burrs or sharp edges removed. The pipe can then be pushed into each port until the tube stop is reached. It is important to enure the full insertion depth of 35mm and external markings on the connector body indicate the correct insertion depth.

Disconnection

Ensure the air line is turned off and depressurised before attemping to remove fittings. Push in collet squarely against the face of fitting, with the collet held in this position, the pipe can be withdrawn. the fitting then can be reused.

JGE 2095/DS JAN 05

All Dimensions in mm

THE COPYRIGHT IN THIS DRAWING AND THE PRODUCTS REFERRED THEREON BELONG TO JOHN GUEST INTERNATIONAL LIMITED AND THIS DRAWING NOR THE INFORMATION CONTAINED HEREIN SHALL BE PRODUCED IN ANY FORM OR USED FOR ANY PURPOSE WITHOUT WRITTEN CONSENT © 2007

The company has a policy of continuous research and development and reserves the right to amend without notice the specification and design of all products illustrated. For details of terms and conditions and any other technical enquiries, please contact our Customer Services Department.

ISSUE 1 SMD 03-05-07

DS-PMTT22E