Selecting Flexible Couplings

Introduction to couplings

In the simplest of terms a coupling's purpose is to transfer rotational movement from one shaft to another. Reality is somewhat more complicated, though, as flexible shaft couplings have also to compensate for misalignment between two shafts. This ability must be balanced with the need to be pliable in the planes of misalignment while still having the torsional strength to carry out the coupling's main function. This is known as the Compliance mechanism where compliance is the capacity for allowing relative displacement.

Several factors should always be taken into consideration when looking to specify flexible shaft couplings. These are torsional stiffness, backlash, torque, life and attachment system. All of these have bearing on coupling selection.

Selecting the ideal coupling

The choice of couplings available to today's engineers can be daunting, but follow our guidelines and you will arrive at the optimum coupling for your particular application.

- *Does the coupling provide adequate misalignment protection?*
- *Can it transmit the required torque?*
- *Do I need axial motion or axial stiffness?*
- *Can it sustain the required speed of rotation?*
- *Will it fit within the available space envelope?*
- *Can it operate at the designated ambient temperature?*
- *Does it provide torsional stiffness required for positional accuracy?*
- *Does it provide electrical isolation between the shafts?*
- *Will it have the required life expectancy?*



Service Factors

- Peak torque values quoted in the coupling performance tables apply to uniform load conditions at constant speed where there is no misalignment or axial displacement.
- The torque capacity of flexible couplings will reduce when acceleration is present, for example, in stop/start or reversing conditions.
- The more severe the acceleration, the greater reduction in torque capacity.
- Sliding couplings (Oldham and UniLat) are subject to a wear rate dependent on the number of cycles completed.

Peak torque must be greater than application torque x service factor

	Load					Duty (Hours/Day)				
	Steady State	Stop/Start	Reversing	Shock	Shock & Reversing	<1	1 - 2	3 - 5	6 - 12	>12
Huco Flex B	1.5	2.0	2.0	3.0	4.0	-	-	-	-	-
Huco Flex K	1.5	2.0	2.0	3.0	4.0	-	-	-	-	-
Huco Flex M	1.5	2.0	2.0	3.0	4.0	-	-	-	-	-
Huco Flex Ni	1.0	2.0	2.0	3.0	4.0	-	-	-	-	-
Huco Flex P	1.0	1.5	1.5	3.0	4.0	-	-	-	-	-
Huco Flex G	1.0	2.0	4.0	4.0	4.0	-	-	-	-	-
Huco MultiBeam	1.0	1.5	2.0	(Note 1)	(Note 1)	-	-	-	-	-
Huco S-Beam	1.0	1.5	2.0	(Note 1)	(Note 1)	-	-	-	-	-
Huco TorqLink	1.0	1.5	2.0	(Note 1)	(Note 1)	-	-	-	-	-
Huco Oldham	-	-	-	-	-	1.0	2.0	4.0	6.0	8.0
Huco Flex - B	-	-	-	-	-	1.0	1.5	2.0	3.0	4.0
Uni-Lat	-	-	-	-	-	1.0	1.5	2.0	3.0	4.0

Note 1: Not recommended in these conditions

Sliding Disc type	Universal / Lateral type	Double Loop type	Jaw Coupling	Universal Joints & Teleshafts	Friction Clutches	Bevel Gearboxes
Oldham Blind bored  Thru' bored  Thru' bored  Material Options: Aluminium Stainless Steel	**Uni-Lat**  	**Flex-P**   	**Jaw coupling** 	**Huco-Pol** Single joints  Double joints  Teleshafts 	**Vari-Tork, Polyclutch** Basic clutch  Basic clutch + Oldham coupling  Polyclutch 	**L-Box**  **T-Box** 
General description						
General purpose, robust, easy to use 3-part couplings with replaceable wear elements. Generous radial compensation and pull-apart / re-engage facility for blind assemblies.	Unique, general purpose light duty couplings with generous angular and radial misalignment compensation. Resist axial motion, can anchor unrestricted shafts and perform light push/pull duties.	Exceptional flexibility in all three directions, radial, angular and axial	High torque capacity and high speed are available from this naturally balanced coupling	Light duty plastic universal joints and extensible drive shafts (teleshafts). Low mass, corrosion resistant, ideal where conventional steel joints would be under-utilised.	Small, user-adjustable torque limiters for concentric or in-line mounting. Operate by friction using interleaved clutch plates.	Small 90° drives encased in molded housings providing electrical isolation between shafts and mounting surface. The L-Box is rated for intermittent use, the T box for continuous. 1:1 & 2:1 ratios are available with the T-Box.
Where to use						
Stepper drives for most applications including positioning slides, pumps, actuators, etc.	Encoder, resolver, tacho, potentiometer drives. Small positioning slides, dosing pumps, & light drives generally.	Light power drives, pumps and small generators	Light power drives where misalignment is small	Intermittent applications in business machines, instrumentation, lab equipment, analytical apparatus, etc., where steel joints would be under-utilised.	Friction clutches interrupt rotation when the load being transmitted reaches a pre-determined threshold. Used in all kinds of small drives to help protect personnel and equipment.	L-box offers a compact means to route drives thru' 90°. T-box offers 2 & 3 shaft configurations for multiple power offtake.
Speeds						
Up to 3000 rpm.	Up to 3000 rpm.	Up to 3000 rpm.	Up to 40,000 rpm.	Up to 1000 rpm	Up to 1000 rpm slipping speed	Up to 1500 rpm for T-box
Peak torque largest size						
44 Nm	12 Nm	18 Nm	133 Nm	10.7 Nm	60 Nm	0.68 Nm
Standard bores						
2 to 30	3 to 22	3 to 16	3 to 16	3 to 20	6 to 32	4 & 5 (shafts)
Temperature range						
–20 to +60°C	–20 to +60°C	–40 to +100°C	–40 to +80°C	–20 to +60°C	–10 to +80°C (when operating)	–20 to +60°C
Electrically isolating						
Yes	Yes	Yes	Yes	Yes	No	*See General Description above*
Connection						
Clamp or Set Screw	Clamp or Set Screw	Set Screw	Clamp or Set Screw	Set Screw, Bonding, or Cross-Pinning	Clamp or Set Screw	N/A
Page 28 - 30	**Page 26 - 27**	**Page 44**	**Page 42 - 43**	**Page 45 - 50**	**Page 51 - 56**	**Page 57 - 58**

Round & Keywayed Bore Details & Codes

Metric mm	Inch fraction	Inch decimal	Round bore code	Metric keys		Inch keys		Keywayed bore code
				Key size w x h	K	Key size w x h	K	
1	–	0.0394	08	–	–	–	–	–
1.588	1/16	0.0625	10	–	–	–	–	–
2	–	0.0787	11	–	–	–	–	–
2.286	–	0.0900	12	–	–	–	–	–
3	–	0.1181	14	–	–	–	–	–
3.048	–	0.1200	15	–	–	–	–	–
3.175	1/8	0.1250	16	–	–	–	–	–
*3.969	5/32	0.1563	–	–	–	–	–	–
4	–	0.1575	18	–	–	–	–	–
4.763	3/16	0.1875	19	–	–	–	–	–
5	–	0.1969	20	–	–	–	–	–
6	–	0.2362	22	–	–	–	–	–
6.350	1/4	0.2500	24	–	–	–	–	–
7	–	0.2756	25	2 x 2	8.00	–	–	P25
7.938	5/16	0.3125	27	–	–	1/8 x 1/8	0.3755	R27
8	–	0.3150	28	2 x 2	9.00	–	–	P28
9	–	0.3543	30	3 x 3	10.40	–	–	P30
9.525	3/8	0.3750	31	–	–	1/8 x 1/8	0.4380	R31
10	–	0.3937	32	3 x 3	11.40	–	–	P32
11	–	0.4331	33	4 x 4	12.80	–	–	P33
12	–	0.4724	35	4 x 4	13.80	–	–	P35
12.700	1/2	0.5000	36	–	–	1/8 x 1/8	0.5630	R36
13	–	0.5118	37	5 x 5	15.30	–	–	P37
14	–	0.5512	38	5 x 5	16.30	–	–	P38
15	–	0.5906	40	5 x 5	17.30	–	–	P40
15.875	5/8	0.6250	41	–	–	3/16 x 3/16	0.7160	R41
16	–	0.6299	42	5 x 5	18.30	–	–	P42
17	–	0.6693	43	5 x 5	19.30	–	–	P43
18	–	0.7087	45	6 x 6	20.80	–	–	P45
19	–	0.7480	46	6 x 6	21.80	–	–	P46
19.050	3/4	0.7500	47	–	–	3/16 x 3/16	0.8410	R47
20	–	0.7874	48	6 x 6	22.80	–	–	P48
22	–	0.8661	49	6 x 6	24.80	–	–	P49
22.225	7/8	0.8750	50	–	–	1/4 x 1/4	0.9930	R50
24	–	0.9449	51	8 x 7	27.30	–	–	P51
25	–	0.9843	52	8 x 7	28.30	–	–	P52
25.400	1	1.0000	53	–	–	1/4 x 1/4	1.1180	R53
28	–	1.1024	54	8 x 7	31.30	–	–	P54
28.575	1-1/8	1.1250	55	–	–	5/16 x 1/4	1.2400	R55
30	–	1.1811	56	8 x 7	33.30	–	–	P56
31.750	1-1/4	1.2500	57	–	–	5/16 x 1/4	1.3580	R57
32	–	1.2598	58	10 x 8	35.30	–	–	P58
34.925	1-3/8	1.3750	59	–	–	3/8 x 1/4	1.4830	R59
35	–	1.3780	60	10 x 8	38.30	–	–	P60
38	–	1.4961	61	10 x 8	41.30	–	–	P61
40	–	1.575	63	12 x 8	43.30	–	–	P63
50	–	1.969	70	14 x 9	53.8	–	–	P70
50.800		2.000	71	–	–	1/2 x 1/2	2.224	R71
55	–	2.165	73	16 x 10	59.3	–	–	P73
60	–	2.362	75	18 x 11	64.4	–	–	P75
63.500	2-1/2	2.500	77	–	–	5/8 x 5/8	2.778	R77
65	–	2.559	78	18 x 11	69.4	–	–	P78

*Not manufactured. Nearest alternative 4mm.
Intermediate size available on request

All shaft mounted products in this catalogue can be specified with inch and/or metric bore diameters. A standard range of sizes is listed for each product. Where physical dimensions permit, keyways may be specified at extra cost.

For the sake of uniformity and avoidance of errors when ordering, bore diameters are designated with a 2-digit number which forms part of the order code. *Please note that only the bore diameters listed for each product in the product pages are standard.*

To specify a **keywayed** bore, prefix the 2-digit number with a 'P' for metric keyways or an 'R' for an inch keyway.

Standard keyways are machined to 2 specifications:

Bore codes prefixed 'P' denote a metric keyway conforming to ISO 773/774 (BS 4235 Pt. 1).

Bore codes prefixed 'R' denote an inch keyway conforming to BS 46 Pt. 1.

In most cases, keyways prefixed 'R' are compatible with AGMA 9002–A86 but can differ in the depth of the key seat.

All Huco couplings are RoHS compliant.

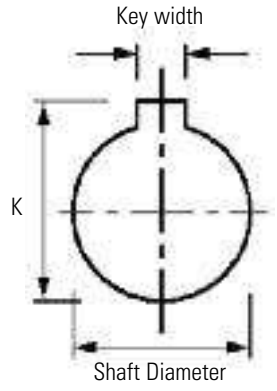

Note that our tooling produces a key seat classified as 'nominal' being a nominal clearance on standard keys

Order Codes

Combine the COUPLING REF in Main Product Tables with BORE REFS in Standard Bores Table.
Please identify both bores e.g.

706.19.1924

Coupling ref.

Ø B1 ref.

Ø B2 ref.



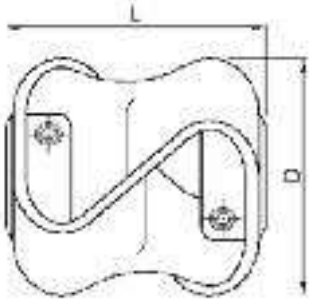



DIMENSIONS & ORDER CODES

Size	steel zinc plated hubs	stainless steel hubs	Dimensions					Fasteners		
	Order Code		Max Diameter	Length L +/- 1.0	Bore length	Max Bores	Mass kg x 10-3	Size	Torque (Nm)	A/F (mm)
10	047.10 -	- 049.10	27	27	7.9	9.53	25	M3	0.94 0.32	1.5
20	047.20 -	- 049.20	48	48	12.7	12.7	92	M4	2.27 2.0	2.0
30	047.30 -	- 049.30	54	55	16.0	16.0	124	M5	4.62 2.1	2.5
40	047.40 -	- 049.40	56	56	16.0	16.0	136	M6	7.61 3.75	3.0
40*	-	050.40	56	56	16.0	16.0	136	M6	7.61	3.0

PERFORMANCE

Size	Max Torque 1 (Nm)	Max Torque 2 (Nm)	max misalignment/displacement		
			Angular deg	Radial mm	Axial +/- mm
10	0.5	0.8	10	2.6	4.5
20	1.8	3	15	3.2	7.5
30	5	8	15	3.2	8.5
40	10	18	15	3.2	11
40*	2.5	4.5	15	3.2	11

Torque 1 = torque at maximum displacement
Torque 2 = torque at 1 deg. angular, 2mm axial and 0.5mm radial displacement

Materials & Finishes

Hubs: Steel 230M07 pb Zn plated + clear passivate
or
Stainless Steel 303 S31 natural finish

Flexing Element: Hytrel

Fastener: Steel Hub: Alloy steel, black oiled
Stainless Steel Hub: stainless steel

Temperature Range

–40°C to +100°C

Maximum Rotational Speed

3000 rev/min

STANDARD BORES*

Size	+0.05/-0mm																
	3	3.175	4	4.763	5	6	6.350	7.938	8	9.525	10	12	12.700	14	15	15.875	16
10	●	●	●	●	●	●	●	●	●	●							
20						●	●	●	●	●	●	●	●				
30										●	●	●	●	●	●	●	●
40										●	●	●	●	●	●	●	●
Bore Ref	14	16	18	19	20	22	24	27	28	31	32	35	36	38	40	41	42

* Couplings with dissimilar bores are non-standard

Double loop Couplings with Steel & Stainless Steel Hub

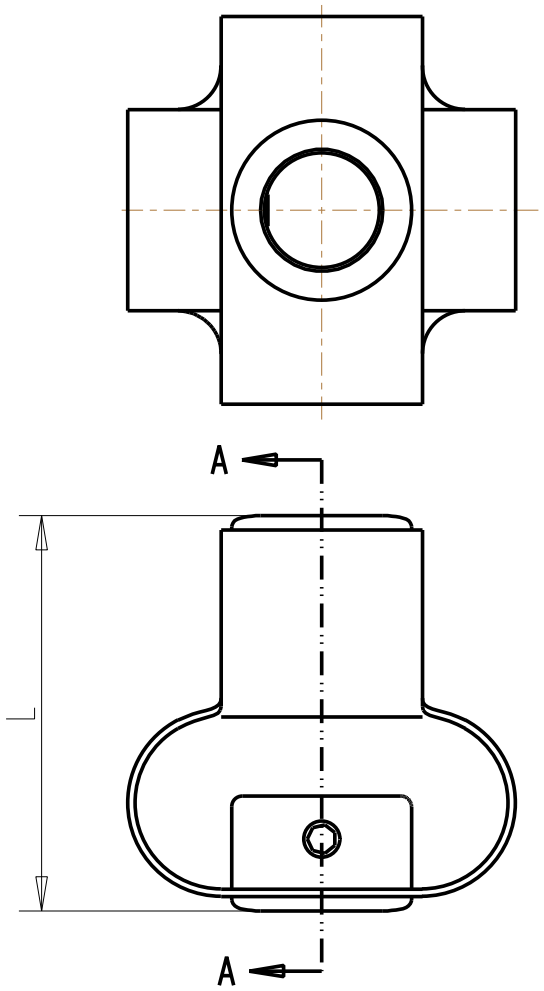

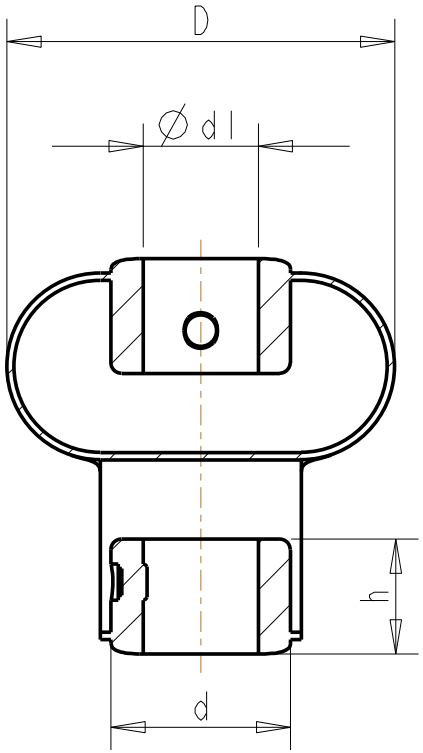

SECTION A-A

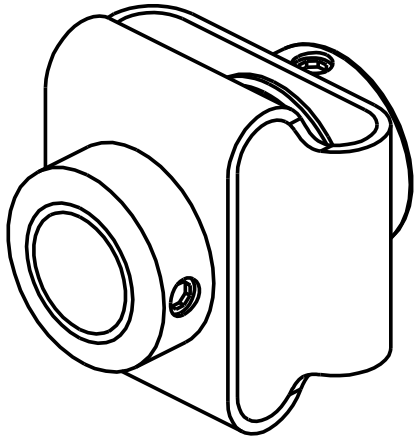

Size - 10

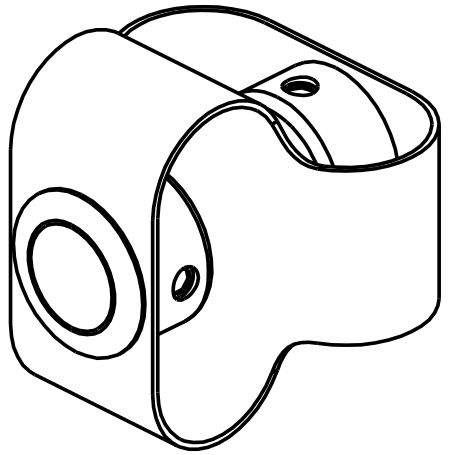

Size - 20,30,40

All Dimensions in mm

NOT TO SCALE

* For Stainless Steel 0.49.20 the Bore max is 12.7

Ref. No. Stainless Steel	Ref. No. Steel	∅ D (max)	d1	L	h	Screw
049.10	047.10	27	9.53	27	7.90	M3
049.20	047.20	48	* 12.00	48	12.70	M4
049.30	047.30	54	16.00	55	16.00	M5
049.40	047.40	56	16.00	56	16.0	M6