Your Expert Partner for **Human Machine Interfaces**

Actuator

Distribution by
Rs-online

51-
402.036D



https://rs-online.eao.com/component/51-402.03...

Your product:



51-402.036D
Actuator

FRONT

Front dimension:	24 mm x 18 mm
Front form:	Rectangular

MOUNTING

Design:	Raised
Mounting type:	Panel mounting

ELECTRICAL CHARACTERISTICS

Switching voltage and switching current:	100 mA at 42 VAC/VDC
Contacts:	1 NC / 1 NO
Switching rating:	42 V @ 0,1 A
Electric strength:	2500 VAC, 50 Hz, 1 min. between all terminals and earth, according to IEC 61058-1, part 15
Electrostatic discharge (ESD):	≤ 15 KV

MECHANICAL CHARACTERISTICS

Terminal:	Universal terminal, 2 x 0.5 mm
Contact material:	Gold
Switching action:	Rest (a) - Maintained (a)
Switching system:	Low-level element
Switching system:	This low-level switching element was designed for switching low powers in electronic circuits. The mechanism assures reliable switching of loads ranging from a few µA/µV up to 100 mA/ 42 VAC/DC. Single-break momentary contact, as normally open or normally closed with 4 independent points of contact. 2 momentary contactsper switching element;

combination of normally open and normally closed is possible.
Special features are the long life, extremely short rebound time and stable contact resistance.

Switching positions:	2 positions
Switching angle:	90° right
Mechanical lifetime:	50 000 cycles of operation
Operating force:	1,8 ... 3,5 N
Tightening torque:	Fixing nut max. 0.5 Nm
Terminal details 1:	The universal terminals permit these units to be mounted on printed circuit boards (PCB). These terminals can also be used as soldering or plug-in terminals. For these terminals we can also supply a plug-in base which, when soldered on to the board, enables the switch to be plugged in.
Weight:	0.019 kg

AMBIENT CONDITION

IP front protection:	IP65, according to DIN EN 60529
Operating temperature:	– 25 °C ... + 55 °C
Storage temperature:	– 40 °C ... + 85 °C
Shock resistance:	15 g for 11 ms, as per DIN / EN 60512-4-3, DIN / EN 60068-2-27 (Single impacts, semi-sinusoidal)

CERTIFICATE

Approbations:	CB (IEC 61058-1), CQC, CSA, DNV, ENEC (EN 61058-1), UL
REACH:	REACH compliant
RoHS:	RoHS compliant

OTHER

Short Description:	Actuator, 24 mm x 18 mm, Rectangular, 1 NC / 1 NO, Rest (a) - Maintained (a), Universal terminal, 2 x 0.5 mm, IP65, according to DIN EN 60529
Housing colour:	Black
Hints:	Standard lock: DOM 311
Switching positions:	

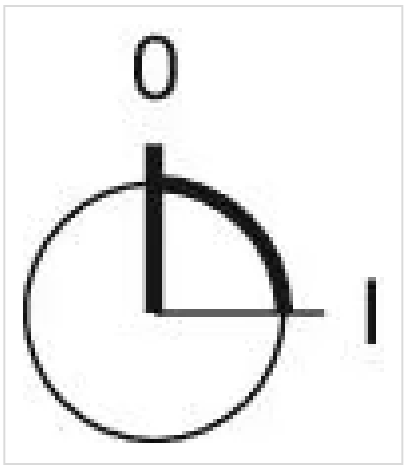

Wiring diagrams:

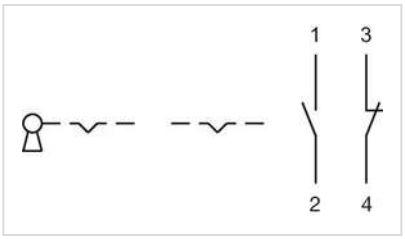

Component layouts:

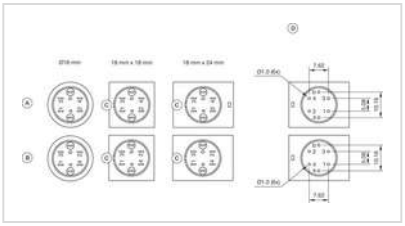

A = Universal terminal (rear side)
B = Plug-in terminal (rear side)
C = Anti twist device
D = Drilling plan

Mounting cut-outs:

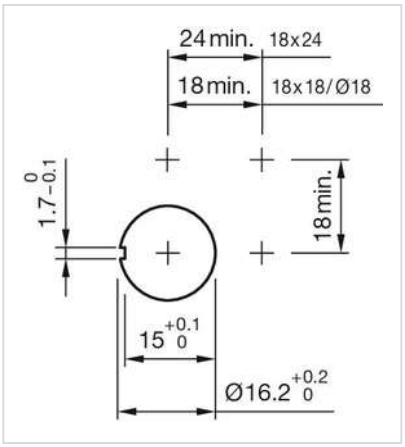

Dimension drawings:

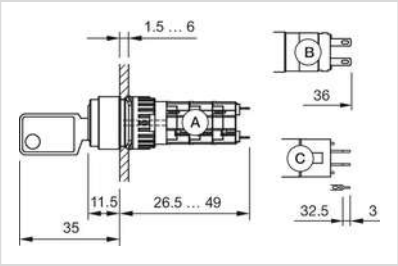

A = Solder terminal
B = Plug-in terminal 2.8 mm x 0.5 mm
C = Universal terminal 2.0 mm x 0.5 mm