22ECT48 Ultra EC™

Ø 22 mm • 4-pole • 54 W

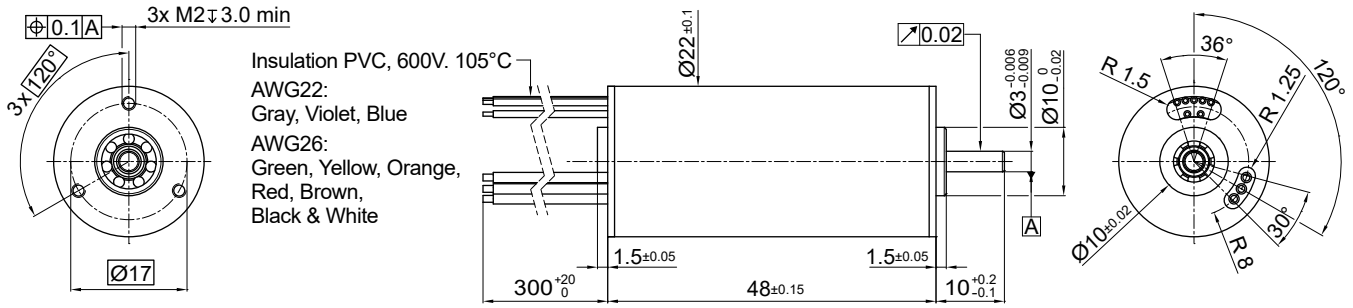

Dimensions in mm.

Electrical Data		Symbol	22ECT48 10B-xxx.01			Unit
			14	23	35	
1	Nominal Voltage	U_N	12	24	24	Volt
2	Optimization Direction	-	Symmetrical	Symmetrical	Symmetrical	-
3	No Load Speed	n_0	10,140	11,950	7,950	rpm
4	Typical No Load Current	I_0	155	120	70	mA
5	Max. Continuous Mechanical Power (@25°C)	P_{max}	54.0	54.0	54.0	W
6	Max. Continuous Current	$I_{e\,max}$	3.7	2.2	1.5	A
7	Max. Continuous Torque	$M_{e\,max}$	41.6 (5.9)	41.1 (5.82)	40.8 (5.78)	mNm (oz-in)
8	Back EMF Constant	k_E	1.17	1.95	2.94	V/1000 rpm
9	Torque Constant	k_M	11.2	18.6	28.1	mNm/A
10	Motor Regulation	R/k^2	2.9	3.0	3.0	10^3/Nms
11	Motor Regulation	$k/R^{½}$	18.4 (2.61)	18.2 (2.58)	18.1 (2.57)	mNm/W^{½} (oz-in/W^{½})
12	Internal Resistance - phase to phase	R_l	0.37	1.04	2.40	ohms
13	Line to Line Resistance at Connectors	R_L	0.40	1.07	2.43	ohms
14	Inductance Phase to Phase	L	0.04	0.11	0.24	mH
15	Mechanical Time Constant	τ_m	1.8	1.9	1.9	ms
16	Electrical Time Constant	τ_e	0.11	0.10	0.10	ms

General Data				
17	Maximum Motor Speed	n_{max}	20,000	rpm
18	Ambient Working Temperature Range	-	-30 to + 100 (-22 to + 212)	°C (°F)
19	Ambient Storage Temperature Range	-	-40 to + 100 (-40 to + 212)	°C (°F)
20	Ball Bearings Preload	-	6.8	N
21	Axial Static Force w/o Shaft Support (max)	-	45	N
22	Maximum Winding Temperature	-	125 (257)	°C (°F)
23	Thermal Resistance	R_{th}	2.1 / 12	°C/W
24	Thermal Time Constant	τ_w	962	s
25	Weight	-	98 (3.46)	g (oz)
26	Rotor Inertia	J	6.3	g-cm^2
27	Hall Sensor Electrical Phasing*	-	120	Electrical °

*Available without hall sensor

Wire	Description
Gray	Phase 1
Violet	Phase 2
Blue	Phase 3
Green	3.5 to 24V DC
Yellow	GND
Orange	Sensor 1
Red	Sensor 2
Brown	Sensor 3
Black	NTC 10 kohm
White	NTC 10 kohm
with hall effect sensor	

No load speed for each coil

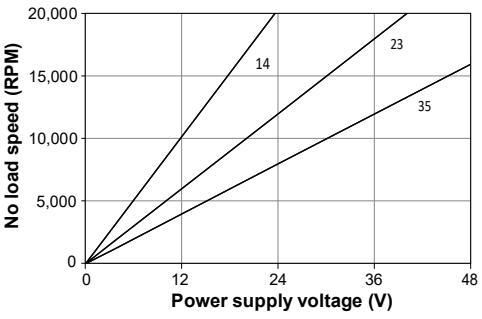

Max. continuous operation at 25°C

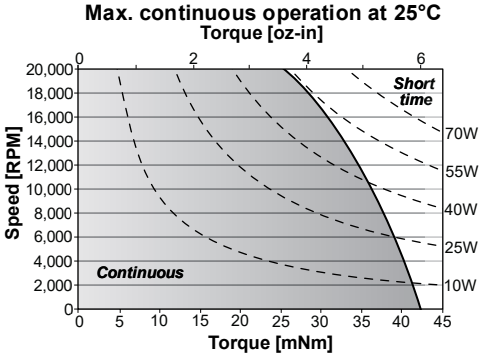

V012021 • © 2021 Portescap. Specifications subject to change without notice.