When assembling contact blocks with 2NC+2NO the panel cut-out must be adjusted to the dimensions shown on page 20.

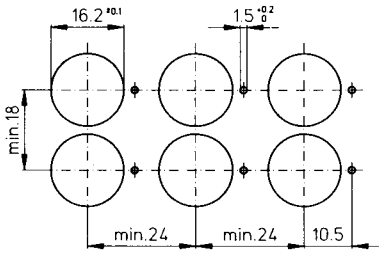

18 x 24 IP40

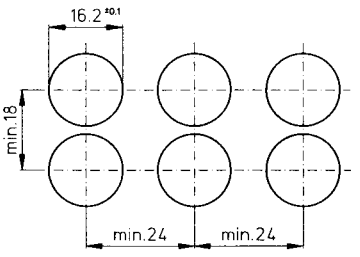

18 x 24 IP67

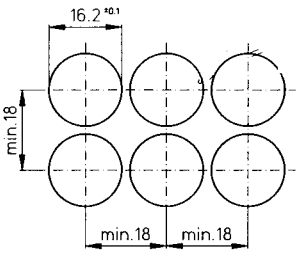

18 x 18 / Ø 18 IP40 / IP67

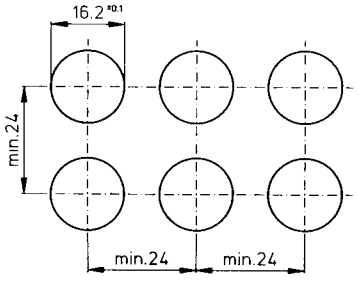

Ø 24 24 x 24 IP40 / IP65

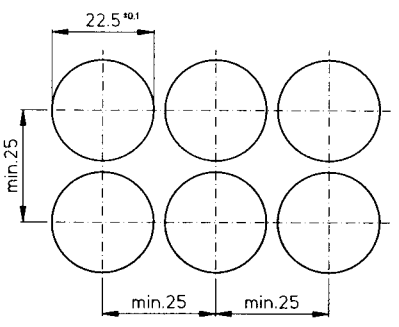

Ø 25 IP40 / IP65 / IP67

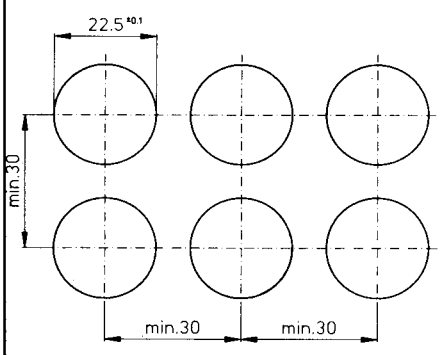

Ø 30 IP65

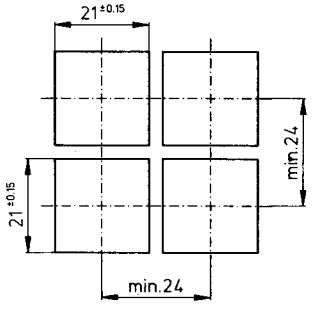

24 x 24 IP40 / IP67

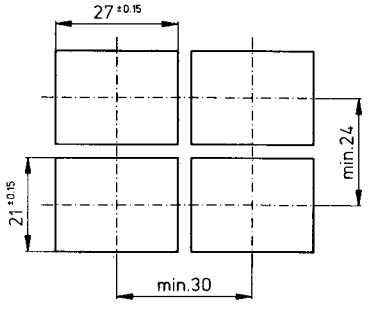

24 x 30 IP40 / IP67

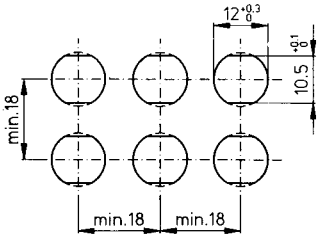

Ø 12 IP40

Caution: In interlocking assemblies the panel cut-out tolerances must not accumulate (max. tol. ±0.1mm).

Bi-functional selection

All the latching switches in the th5 and th25 series incorporate a simple selector mechanism for redetermining the function of the switch. These products are marked with a ☺. This mechanism is not supplied in the momentary switch nor in interlocking assemblies.

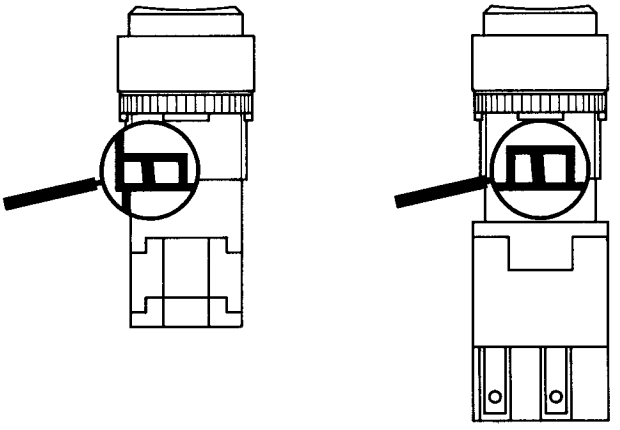

Application:
When the switch is in the „off" position, the selector mechanism in the small side opening on the basic element can be shifted to the right to obtain the momentary function (for example with an opened paper clip), or vice versa to return to the latching function.

Assembly of the contact blocks

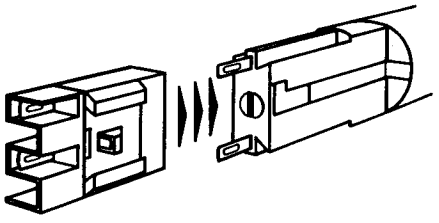

Turn the slot of the red locking pin parallel to the dovetail of the switch body and slide the contact block onto the dovetail.

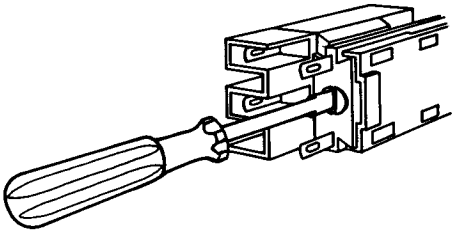

When the switch is in „off" position the contact block must be pushed firmly into position and held there. Secure by turning the red locking pin a quarter turn in a clockwise direction with a suitable screwdriver.