E43329

Mounting adapter for process sensors

ADAPT G1/2-UPJ

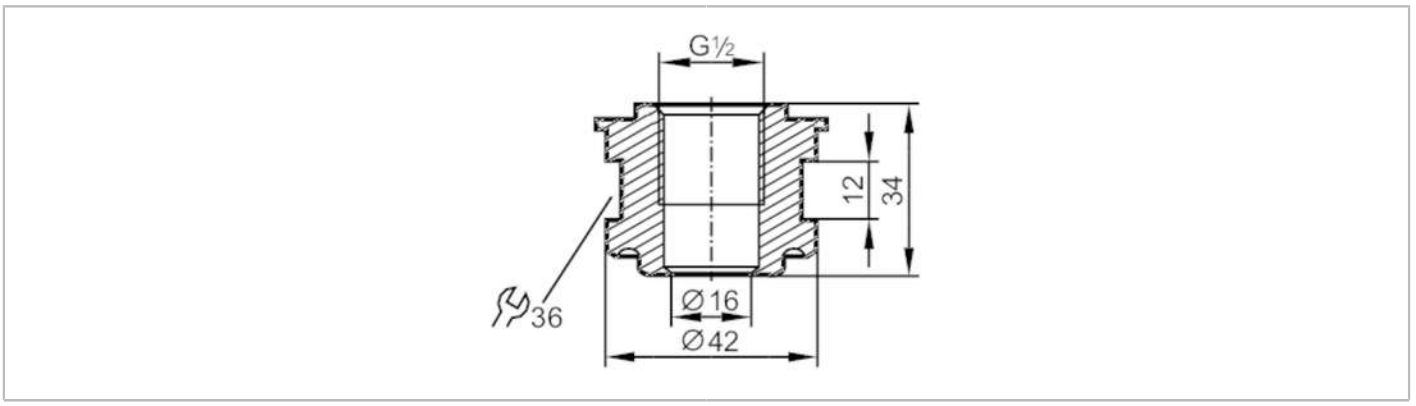

FCM FDA

Mechanical data		
Weight	[g]	297
Materials		stainless steel (1.4435 / 316L)
Sensor connection		G 1/2 sealing cone
Process connection		UPJ Ø 42 mm
Surface characteristics Ra/Rz of the wetted parts		0.8 / 4
Remarks		
Pack quantity		1 pcs.