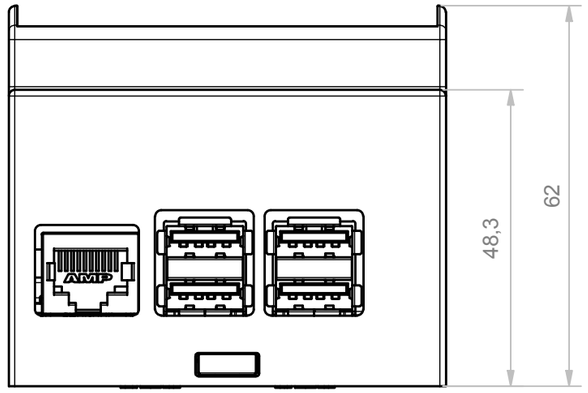

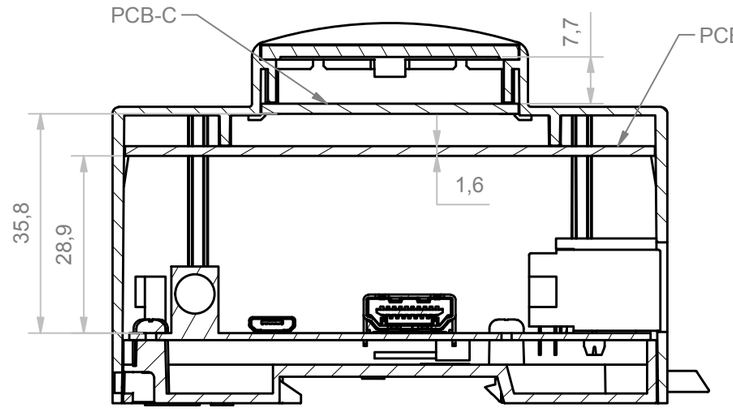

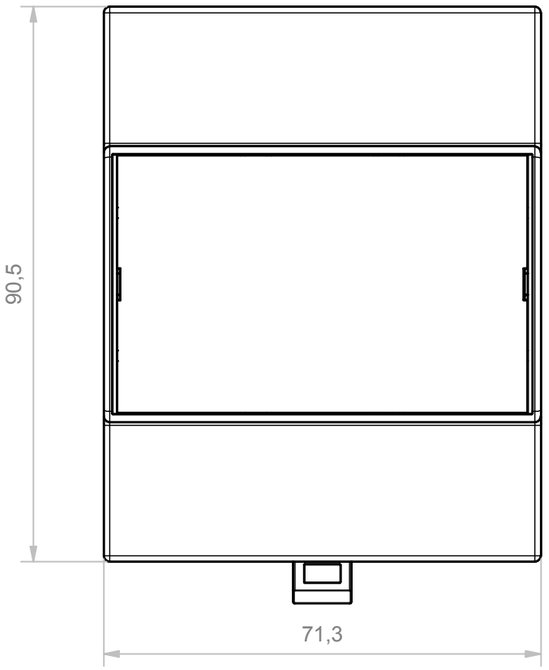

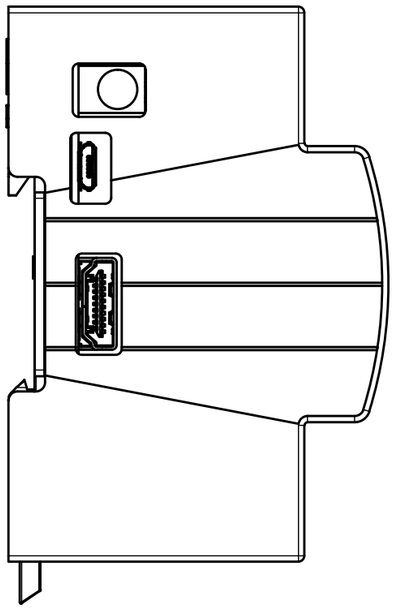

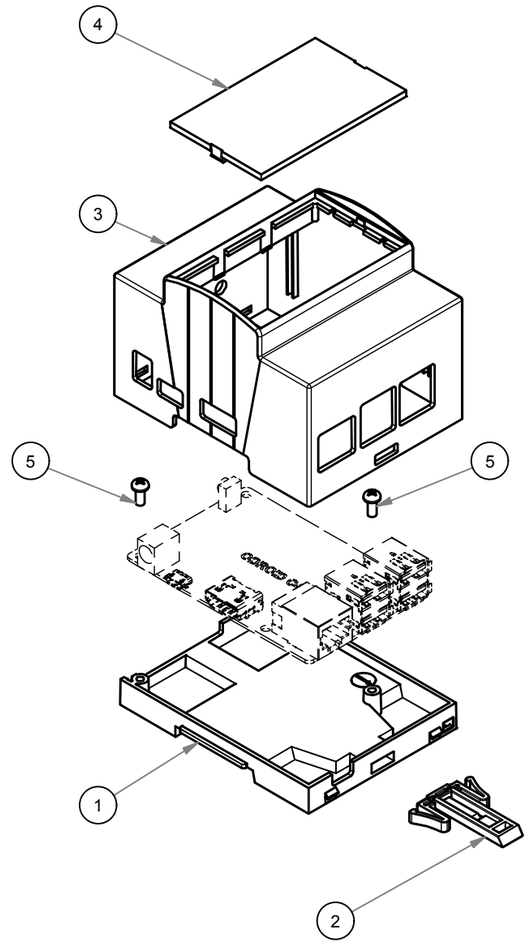

RIF.	Q.TY	DESCRIPTION	DRAWING
1	1	BASE 4M XT WITH SPACERS FOR RASPBERRY PI B+/3/4 AND ODROID C1/C1+	2_050_00025
2	1	MODULAR HOOK LONG	2_250_00072
3	1	BODY 4M53-C XTS ODROID C4	2_050_00038
4	1	PANEL 4M WITHOUT FRAME	2_250_00088
5	2	SCREW d 2.9 X 6.5 TC+ TRUNK-POINT	8_100_00003

General Tolerance UNI EN 22768/1 Media (m)				
from 0.5 to 3	from 3 to 6	from 6 to 30	from 30 to 120	from 120 to 400
± 0.1	± 0.1	± 0.2	± 0.3	± 0.5

Scale:	Sheet nr.:	Drawed:	Checked:	Date:	Revision description
1 : 1	1 / 1	F.E.	R.N.	13/07/2020	

Dimension in mm	Material:	Weight:	Cod. Mold:
		-	--

italtronic enclosures for electronics
Hitaltech
A group of connecting technologies

Description:
KIT 4M XTS Odroid C4
--

Drawing nr.: 3_050_00039

Rev.: 00

RESERVED PROPERTY:The present drawing cannot be reproduced or comunicated to 3d parties, even partially, without the authorization of ITALTRONIC Srl. Italtronic reserves to protect its own rights according to the law.