GEFRAN

PC

RECTILINEAR DISPLACEMENT TRANSDUCER WITH CYLINDRICAL CASE



Principal characteristics

- *The transducer is designed to satisfy extreme applicative demands in terms of mechanical strength.*
- *The 10 mm diameter rod, large steel joints, and reinforced structure make this series mechanically ideal for metalworking, woodworking, and ceramics.*
- *Installation is simplified by the lack of electrical signal variation at output outside theoretical electrical stroke.*
- *The structure based on self-aligning and weight-bearing ball joints permits assembly with free movement of the transducer axle.*

TECHNICAL DATA

Useful electrical stroke (C.E.U.)	50/100/130/150/175/200/225/275/300/360/ 375/400/450/500/600/750
Independent linearity (within C.E.U.)	± 0,05%
Resolution	Infinite
Repeatability	0.01 mm
Protection	IP65
Displacement speed	≤ 5 m/s
Displacement force	≤ 15 N
Life	> 25x10^6 m strokes,or > 100x10^6 operations, whichever is less (within C.E.U.)
Vibrations	5...2000Hz, Amax =0.75 mm amax. = 20 g
Shock	50 g, 11ms.
Tolerance on resistance	± 20%
Recommended cursor current	< 0.1 μA
Maximum cursor current	10mA
Max. applicable voltage	60V
Electrical isolation	>100MΩ at 500V=, 1bar, 2s
Dielectric strength	< 100μA at 500V~, 50Hz, 2s, 1bar
Dissipation at 40°C (0W at 120°C)	3W
Actual Temperature Coefficient of the output voltage	≤ 1.5 ppm/°C
Working temperature	-30...+100°C
Storage temperature	-50...+120°C
Case material	Anodised aluminium Nylon 66 G
Control rod material	Stainless steel AISI 303
Fixing	2 selfloading and selfaligning ball-joints

MECHANICAL DIMENSIONS

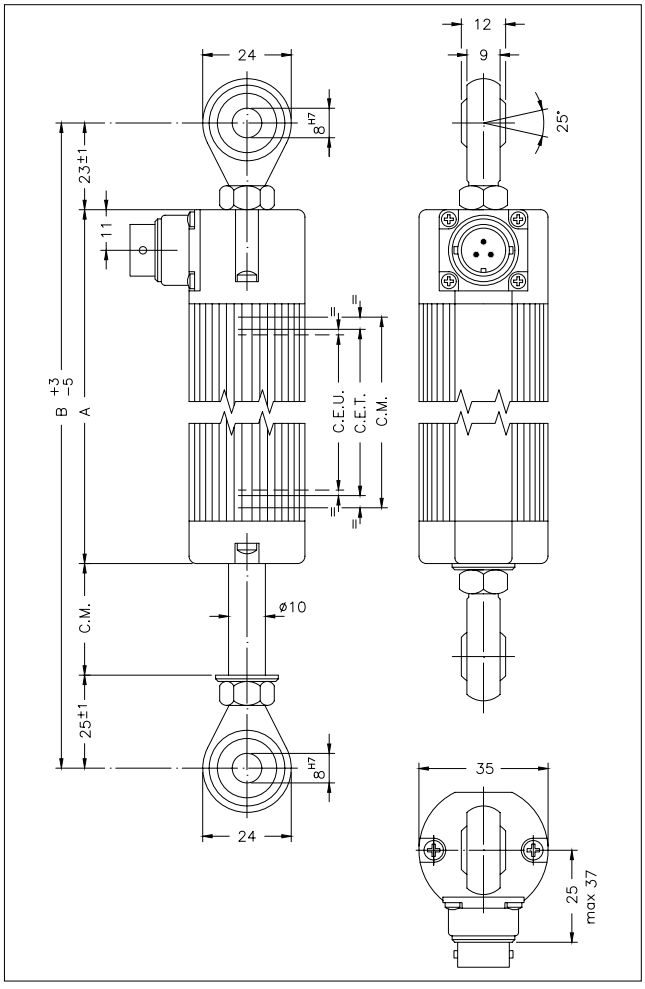

Important: all the data reported in the catalogue linearity, lifetime, temperature coefficient are valid for a sensor utilization as a ratiometric device with a max current across the cursor Ic ≤ 0.1 μA.

MECHANICAL / ELECTRICAL DATA

MODEL		50	100	130	150	175	200	225	275	300	360	375	400	450	500	600	750
Useful electrical stroke (C.E.U.) +3/-0	mm	50	100	130	150	175	200	225	275	300	360	375	400	450	500	600	750
Theoretical electrical stroke (C.E.T.) ± 1	mm	C.E.U. + 3					C.E.U. + 4				364	380	406	457	508	609	762
Resistance (C.E.T.)	kΩ	5					5				5	5	5	5	5	5	10
Mechanical stroke (C.M.)	mm	C.E.U. + 9					C.E.U. + 10				370	386	412	463	518	619	772
Case length (A)	mm	C.E.U. + 130.5					C.E.U. + 131.5				497.5	513.5	539.5	590.5	665.5	766.5	919.5
Min. distance between ball-joints (B)	mm	C.E.U. + 177					C.E.U. + 178				544	560	586	637	712	813	966

ELECTRICAL CONNECTIONS

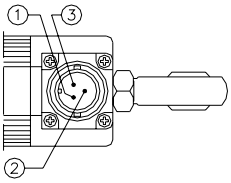

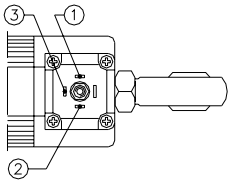

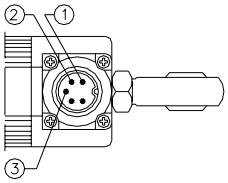

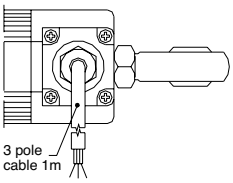

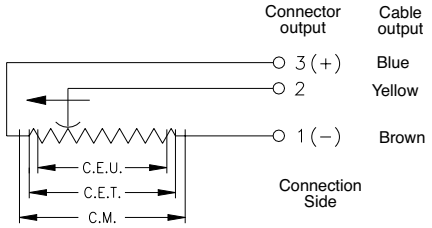

INSTALLATION INSTRUCTIONS

- Respect the indicated electrical connections (DO NOT use the transducer as a variable resistance)
- When calibrating the transducer, be careful to set the stroke so that the output does not drop below 1% or rise beyond 99% of the supply voltage.

ORDER CODE

Displacement transducer **PC** □ □

3-pole connector output	**H**
4-pole connector output DIN43650 ISO4400	**M**
5-pole connector output DIN45322	**B**
3-pole PVC cable output 3x0,25 1m	**F**

Model

□ 0 0 0 X 0 0 0 X 0 0

No certificate attached	**0**
Linearity curve to be attached	**L**

Cable length: 1 m	**0**
Cable length: 2 m	**2**
Cable length: 3 m	**3**
Other lengths on request	.....

Color of plastic heads (green)	**0**
Color of plastic heads (black)	**N**

Ex.:**PC - M - 275**
Displacement transducer model PC,4 pole connector output DIN43650 - ISO 4400, useful electrical stroke (C.E.U.) 275mm

OPTIONAL ACCESSORIES

4-pin 90° radial female PCM connector INDUSTRIAL STANDARD EN175301 spacing 9,4 mm IP65 PG7 for cable ø4 - ø6 mm	**CON008**
3-pin axial female PCH connector IP40 clamp for wire ø4 - ø6 mm	**CON002**
5-pin axial female PCB connector DIN43322 IP40 clamp for wire ø4 - ø6 mm	**CON011**
5-pin axial female PCB connector DIN43322 IP65 clamp PG7 for wire ø4 - ø6 mm	**CON012**
5-pin 90° radial female PCB connector DIN43322 IP40 clamp for wire ø4 - ø6 mm	**CON013**

GEFRAN spa reserves the right to make any kind of design or functional modification at any moment without prior notice

GEFRAN spa
via Sebina, 74
25050 PROVAGLIO D'ISEO (BS) - ITALIA
tel. 0309888.1 - fax. 0309839063
Internet: http://www.gefran.com