Product Data Sheet **9693550185**
VWCE119PJGLS
4314 N/17NT

ebmpapst

engineering a better life



4314 N/17NT

INDEX

1 General 3
2 Mechanics 3
2.1 General 3
2.2 Connections 3
3 Operating Data 4
3.1 Electrical Interface - Input 4
3.2 Electrical Operating Data 5
3.3 Electrical Interface - Output 6
3.4 Electrical Features 7
3.5 Aerodynamics 8
3.6 Sound Data 9
4 Environment 9
4.1 General 9
4.2 Climatic Requirements 9
4.3 Mechanical Requirements 10
5 Safety 11
5.1 Electrical Safety 11
5.2 Approval Tests 11
6 Reliability 11
6.1 General 11

1 General

Fan type	Axial	
Rotating direction looking at rotor	Clockwise	
Airflow direction	Air outlet over struts	
Bearing system	Ball bearing	
Mounting position - shaft	Any	

2 Mechanics

2.1 General

Width	119,0 mm	
Height	119,0 mm	
Depth	32 mm	
Mass	0,23 kg	
Housing material	Plastic	
Impeller material	Plastic	
Max. torque when mounted across both mounting flanges Screw size	Wire outlet corner: 80 Ncm Remaining corners: 80 Ncm ISO 4762 - M4 degreased, without an additional brace and without washer	
Rotor protrusion max.	0,4 mm	

2.2 Connections

Electrical connection	Wires	
Lead wire length Tolerance	L = 310 mm +- 10,0 mm	
Wire size (AWG)	24	
Insulation diameter	1,1 mm	



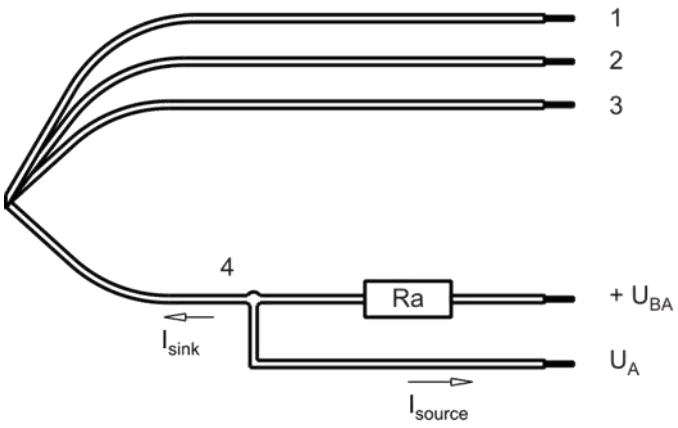

Wire	Color	Operation
1	red	+ UB
2	blue	- GND
3	violet	NTC
4	white	Alarm

The auxiliaries shown on the schematic diagram (which are required for the intended use) are not part of our delivery.

3 Operating Data

3.1 Electrical Interface - Input

Control input	External Temperature Sensor

Features

Characteristics	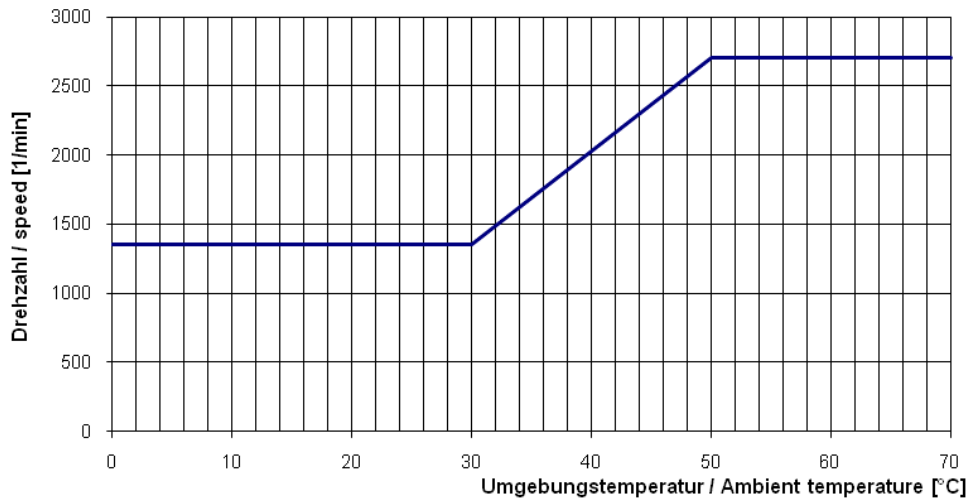
Schematics	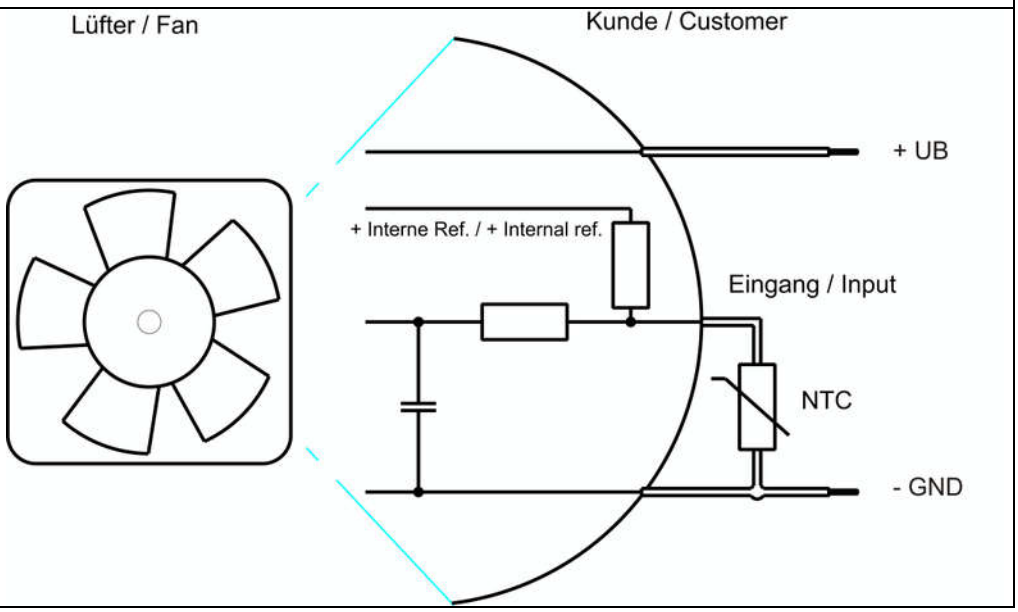

3.2 Electrical Operating Data

Measurement conditions: Normal air density = 1,2 kg/m3; Temperature 23°C +/- 3°C; Motor axis horizontal; warm-up time before measuring 5 minutes (unless otherwise specified). In the intake and outlet area should not be any solid obstruction within 0,5 m.

Δp = 0: corresp. to free air flow (see chapter aerodynamics)
I: corresp. to arithm. mean current value

Name	**Condition**		
TU 0001			
NTC 0001	NTC <= 33 kOhm		

Features	**Condition**	**Symbol**	**Values**		
Voltage range		U	18 V		32 V
Nominal voltage		U_N		24 V	
Power consumption Tolerance	Δp = 0 TU / NTC 0010	P	2,1 W +- 17,5 %	4 W +- 25 %	4,3 W +- 25 %
Current consumption Tolerance	Δp = 0 TU / NTC 0010	I	114 mA +- 17,5 %	165 mA +- 25 %	135 mA +- 25 %
Speed Tolerance	Δp = 0 TU / NTC 0010	n	2.150 1/min +- 12,5 %	2.700 1/min +- 6 %	2.700 1/min +- 6 %
Starting current consumption				780 mA	

3.3 Electrical Interface - Output

Alarm type	/17 (high = ok, open collector)

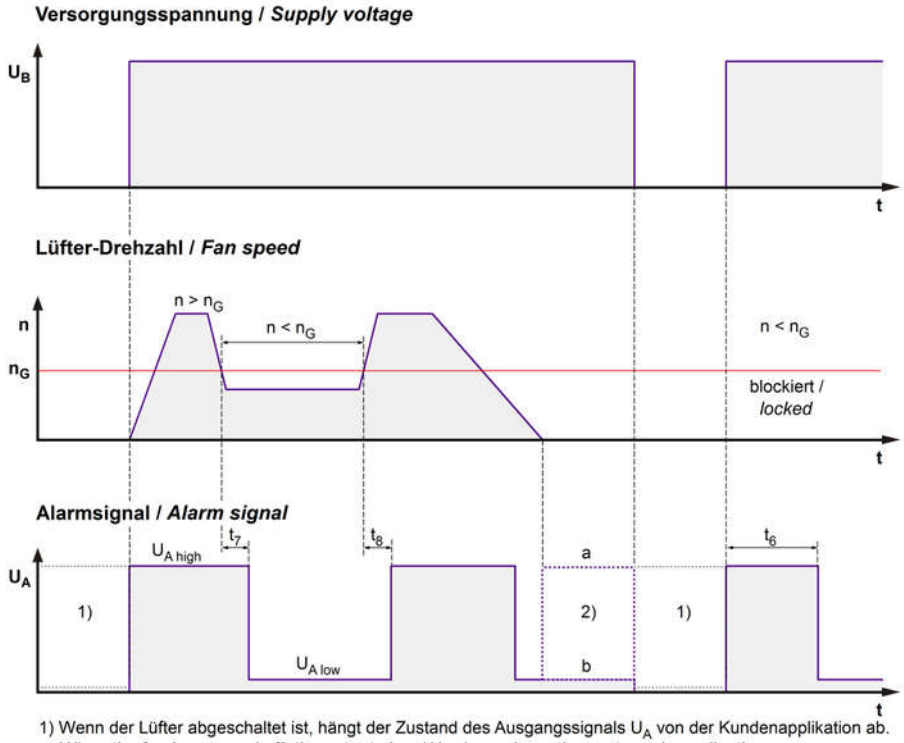

1) Wenn der Lüfter abgeschaltet ist, hängt der Zustand des Ausgangssignals U_A von der Kundenapplikation ab.
When the fan is powered off, the output signal U_A depends on the customer's application.
2) Für den gültigen Zustand (a oder b) siehe Alarmunterdrückung in der Tabelle.
For the valid condition (a or b) see alarm suppression in the table.

$$Ra = \frac{U_{BA} - U_{A\,low}}{I_{sink}}$$

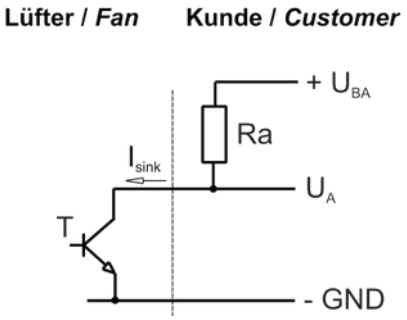

Features		Note	Values
Alarm operating voltage	U_{BA}		<= 60 V
Alarm signal Low	$U_{A\,low}$	I sink: 2 mA	<= 0,4 V
Alarm signal High	$U_{A\,high}$	I source: 0 mA	60 V
Maximum sink current	I_{sink}		20 mA
External resistor		External resistor Ra from UBA to UA required. All voltage measured to GND.	
Alarm start-up delay time	t_6		<= 10 s
Alarm trip speed limit	n_G		1.100 1/min

3.4 Electrical Features

Electronic function	Speed-Controlled	
Reversed polarity protection Max. residual current at U_N	Rectifying diode I_F < 100 uA	
Locked rotor protection	Auto restart	
Locked rotor current at U_N	I_{block} approx. 720 mA	
Clock signal at locked rotor	t_3 / t_4 typical: 0,5 s / 10 s	

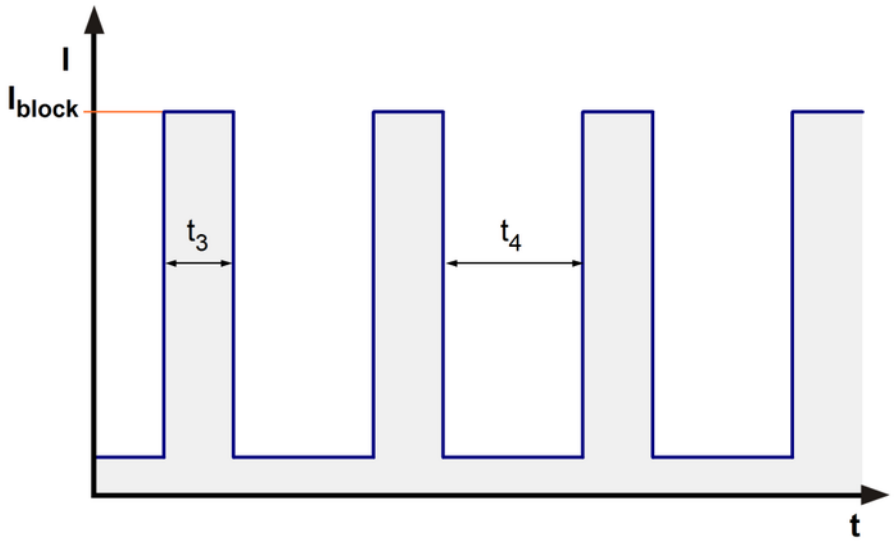

3.5 Aerodynamics

Measurement conditions:	Measured with a double chamber intake rig acc. to DIN EN ISO 5801. Normal air density = 1,2 kg/m3; Temperature 23°C +/- 3°C; In the intake and outlet area should not be any solid obstruction within 0,5 m. Motor shaft horizontal. The information is only valid under the specified test conditions and may be changed by the installation conditions. If there are deviations from the standard test conditions, the characteristic values must be checked under the installed conditions. Power consumption of the fan motor when operating at normal voltage is shown. Depending on the operating conditions of the application, the power input may be higher.

a.) Operation condition:

2.700 1/min at free air flow	NTC <= 33 kOhm		

Max. free-air flow (Δp = 0 / V̇ = max.)	187 m3/h	
Max. static pressure (Δp = max. / V̇ =0)	66 Pa	

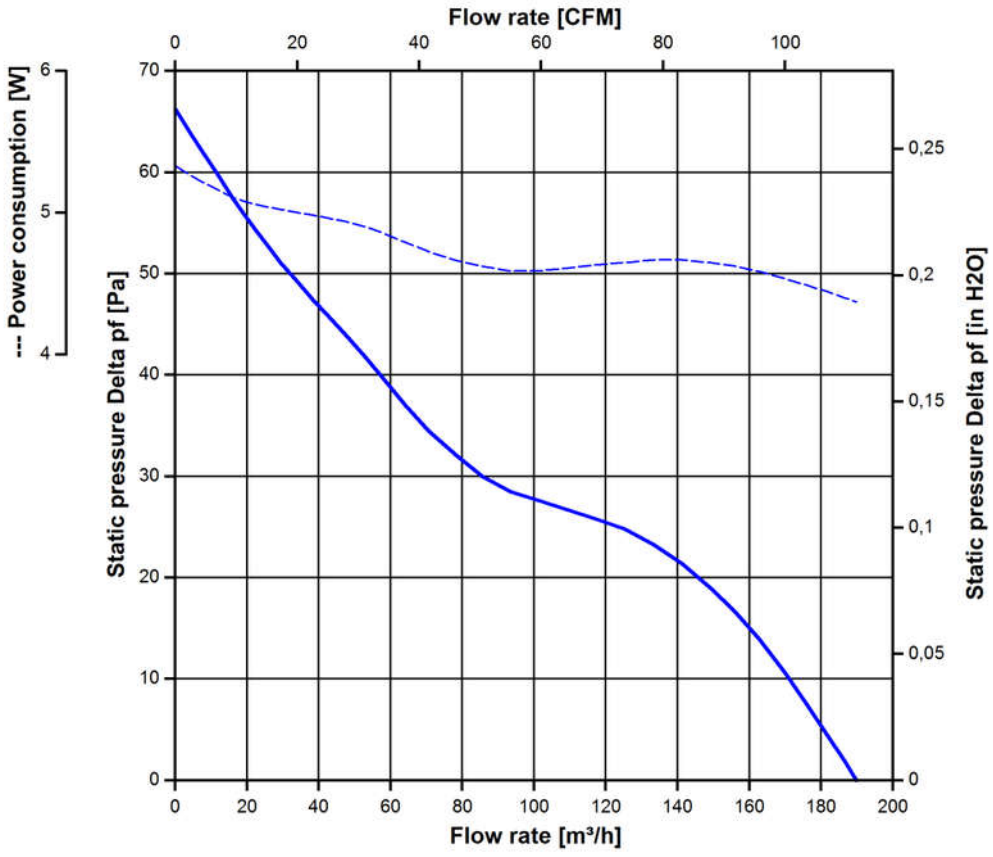

3.6 Sound Data

Measurement conditions:	Sound pressure level: 1 meter distance between microphone and the air intake. Sound power level: Acc. to DIN 45635 part 38 (ISO 10302) Measured in a semianechoic chamber with a background noise level of Lp(A) < 5 dB(A) For further measurement conditions see chapter aerodynamics.

a.) Operation condition:

2.700 1/min at free air flow	NTC <= 33 kOhm		

Optimal operating point	138 m3/h @ 22 Pa	
Sound power level at the optimal operating point	5,4 bel(A)	
Sound pressure level at free air flow, measured in rubber bands	43 dB(A)	

4 Environment

4.1 General

Min. permitted ambient temperature TU min.	-20 °C	
Max. permitted ambient temperature TU max.	70 °C	
Min. permitted storage temperature TL min.	-40 °C	
Max. permitted storage temperature TL max.	80 °C	

4.2 Climatic Requirements

Humidity requirements	humid heat, constant; according to DIN EN 60068-2-78, 14 days	
Water exposure	None	
Dust requirements	None	
Salt fog requirements	None	

Permitted application area:
The product is intended for use in sheltered rooms with controlled temperature and controlled humidity. Directly exposure to water must be avoided.

Pollution degree 1 (according DIN EN 60664-1)
There is either no pollution or it occurs only dry, non-conductive pollution. The pollution has no negative impact.

4.3 Mechanical Requirements

severity level	Vibration (sinusoidal)	
0,5 G	Vibration (sinusoidal) in use IEC 60068-2-6 Displacement / frequency range Acceleration / frequency range Sweep rate Sweep cycles Duration Axes of vibration	 Vibration (sinusoidal) 0,035 mm / 10-60, 60-10 Hz 0,5 G / 60-500-60 Hz 1 Oct./min 10 2 hrs. 3

severity level	stationary use		
1	storage / transportation	Random vibration not in use IEC 60068-2-64 Frequency range / ASD G_{RMS} Axes of vibration Test duration	 Random vibration 5 - 20 Hz : 1,0 m^2 / s^3 20 - 500 Hz : - 3 dB / Oct 0,91 G 3 3 x 5 h
	storage / transportation	Bump not in use IEC 60068-2-29 Shock spectrum Acceleration Duration Number of bumps (+X, -X, -Y, +Y, -Z, +Z) Total bumps	 Bump half sine 18 G 6 ms 100 in each direction 600
	stationary use	Random vibration in use IEC 60068-2-64 Frequency range / ASD G_{RMS} Axes of vibration Test duration	 Random vibration 5 - 20 Hz : 2,0 m^2 / s^3 20- 150 Hz : - 3 dB / Oct 0,83 G 3 3 x 5 h
	stationary use	Bump in use IEC 60068-2-29 Shock spectrum Acceleration Duration Number of bumps (+X, -X, -Y, +Y, -Z, +Z) Total bumps	 Bump half sine 5 G 11 ms 100 in each direction 600

5 Safety

5.1 Electrical Safety

Dielectric strength DIN EN 62368 and DIN EN 60335 A.) Type test Measuring conditions: After 48h of storage at 95% R.H. and 25°C. No arcing or breakdown is allowed! All connections together to ground. B.) Routine test Measuring conditions: At indoor climate. No arcing or breakdown is allowed! All connections together to ground.	500 VAC / 1 Min. Not applicable	
Isolation resistance Measuring conditions: After 48h of storage at 95% R.H. and 25°C measured with U=500 VDC for 1 min.	RI > 10 MOhm	
Clearance / creepage distance	1,0 mm / 1,2 mm	
Protection class	III	

5.2 Approval Tests

CE	EC Declaration of Conformity	Yes
EAC	Eurasian Conformity	Yes
UL	Underwriters Laboratories	Yes / UL507, Electric Fans E38324
VDE	Association for Electrical, Electronic and Information Technologies	Yes / Approval acc. to EN 62368 - Audio/video, information and communication technology equipment
CSA	Canadian Standards Association	Yes / C22.2 No. 113 Fans and Ventilators
CCC	China Compulsory Certification	Not applicable

6 Reliability

6.1 General

Life expectancy L10 at TU = 40 °C	75.000 h	
Life expectancy L10 at TU max.	30.000 h	
Life expectancy L10 acc. to IPC 9591 at TU = 40 °C	127.500 h	

Copying of this document, and giving it others and the use or communication of the contents thereof, are forbidden without express authority. Offenders are liable to the payment of damages. All rights are reserved in the event of the grant of a patent or the registration of a utility model or design.

Schutzvermerk nach DIN 34 1000 beachten !
Refer to protection remark DIN 34 1000 !

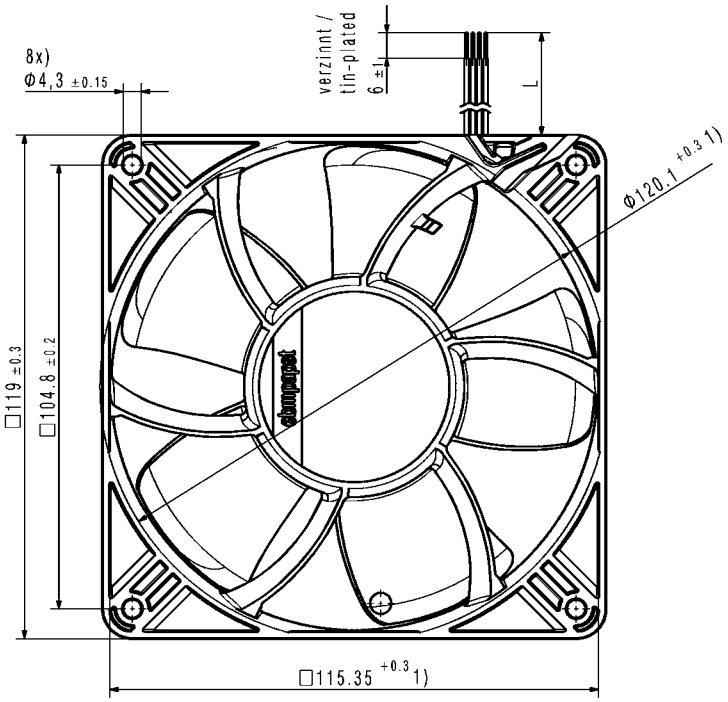

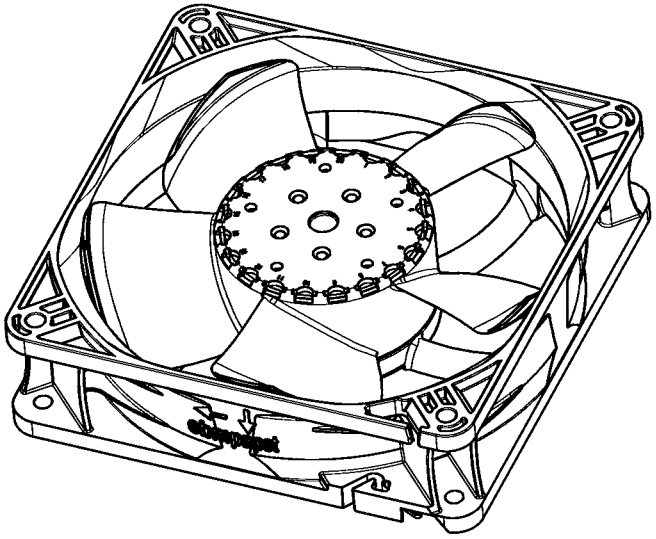

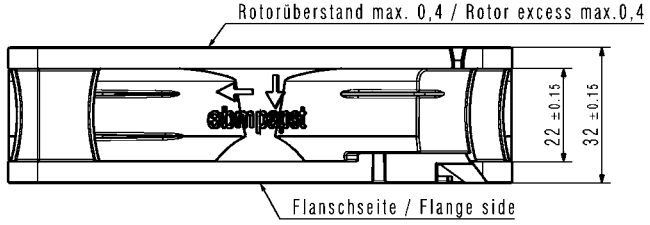

1) Maße für Montagewand / Dimensions for assembly wall
- Kein Axialspiel der Kugellager durch Federausgleich / No axial clearance of ball bearings due to a pre-load spring
- Anzahl und Länge der Litzen siehe Produktspezifikation Blatt 1 / Number and length of the wires see design specification sheet 1

Dokument-Status / Document-State	CATIA-Version/ CATIA-Version	CAD-Umgebung/ CAD-Environment	Werkstoff / Material:	Volumen / Volume (cm^3):
Aend.-Nr./ Change-No.	9698550180 CPR000-			Gewicht / Mass (g):
Toleranzierung / Tolerances:	3D-Referenzmodell / 3D-Referencemodel		Artikel / Title:	
	Datum	Name		
Allgemeintoleranzen / Gen. Tolerances:	Bearb./ Drawn		Zchg.-Nr./ Drawing No:	Ers.f.Zchg. / Replaces:
	Gepr./ Checked			
	Freig./ Release.			
ebmpapst ebm-papst St.Georgen GmbH & Co KG			Dokumenttyp / Type of Document:	Teildokument (Blatt/Page): Index / Index: - Format / Size: Massstab/Scale