LVM20A240

LEVEL MONITORING RELAYS, MODULAR VERSION, SINGLE-VOLTAGE. AUTOMATIC RESETTING, 220...240VAC



Product designation			Level control relay for emptying function. Single voltage. Modular version
Product type designation			LVM20
Function			Emptying function
Auxiliary supply			
Supply voltage Type			Single voltage
Rated auxiliary supply voltage Us AC			
	min	VAC	220
	Max	VAC	240
Operating voltage range			0.85...1.1 Us
Rated frequency		Hz	50/60
Power consumption Max		VA	3.5
Power dissipation Max		W	1.8
Output characteristics			
Number of connectable electrodes		N°	3
Type of electrode			Electrode and electrode holders: SN1 / SCM / CGL / PS31 / PS3S or similar
Electrode voltage			7.5 VAC
Sensitivity		kohm	2.5...50
Time delay			
Tripping time		s	≤0.6
Resetting time		s	≤0.75
Relay outputs			
Number of relays		N°	1
Relay state			Normally de-energised, energises at tripping
Contact arrangement			1 changeover contact C/O-SPDT
Rated operational voltage AC (IEC)		VAC	250
Maximum switching voltage		VAC	400
IEC Conventional free air thermal current Ith		A	8
UL/CSA and IEC/EN 60947-5-1 designation			B300
Electrical life (with rated load)		cycles	105
Mechanical life		cycles	30x106

The characteristics described in this document are subject to updates or modifications at any time. The descriptions, technical and functional information, illustrations and instructions in this brochure are purely illustrative, and are consequently not contractually binding

LVM20A240

LEVEL MONITORING RELAYS, MODULAR VERSION, SINGLE-VOLTAGE. AUTOMATIC RESETTING, 220...240VAC

Indications				
Indication				1 green LED for power on 1 red LED for relay state
Connections				
Terminals type				Screw
Tightening torque for terminals				
		max	Nm	0.8
		max	lbin	7
Conductor cross section				
	AWG/Kcmil			
		min	AWG	24
		Max	AWG	12
	IEC			
		min	mm²	0.2
		Max	mm²	4
Maximum cable lenght			m / ft	800m max / sensitivity 2.5kΩ 150m max / sensitivity 25kΩ 100m max / sensitivity 50kΩ Calculated using 600V 3-core 0.75mm2 section cables.
Insulations				
Rated insulation voltage Ui			V	415
Rated impulse withstand voltage Uimp			kV	6
Operating frequency withstand voltage			kV	4
Double insulation Supply / relay / electrode			VAC	≤250
Ambient conditions				
Temperature				
	Operating temperature			
		min	°C	-20
		max	°C	+60
	Storage temperature			
		min	°C	-30
		max	°C	+80
Housing				
Execution				Modular
N° of modules				2
Material				Self-extinguishing polyamide
Mounting				35mm DIN rail (IEC/EN 60715) or by screws using extractable clips
IEC degree of protection				IP40 on front / IP20 on terminals
Dimensions (W x H x D)			mm	35.8 x 104.7 x 64.9
Weight			g	215

The characteristics described in this document are subject to updates or modifications at any time. The descriptions, technical and functional information, illustrations and instructions in this brochure are purely illustrative, and are consequently not contractually binding

Dimensions

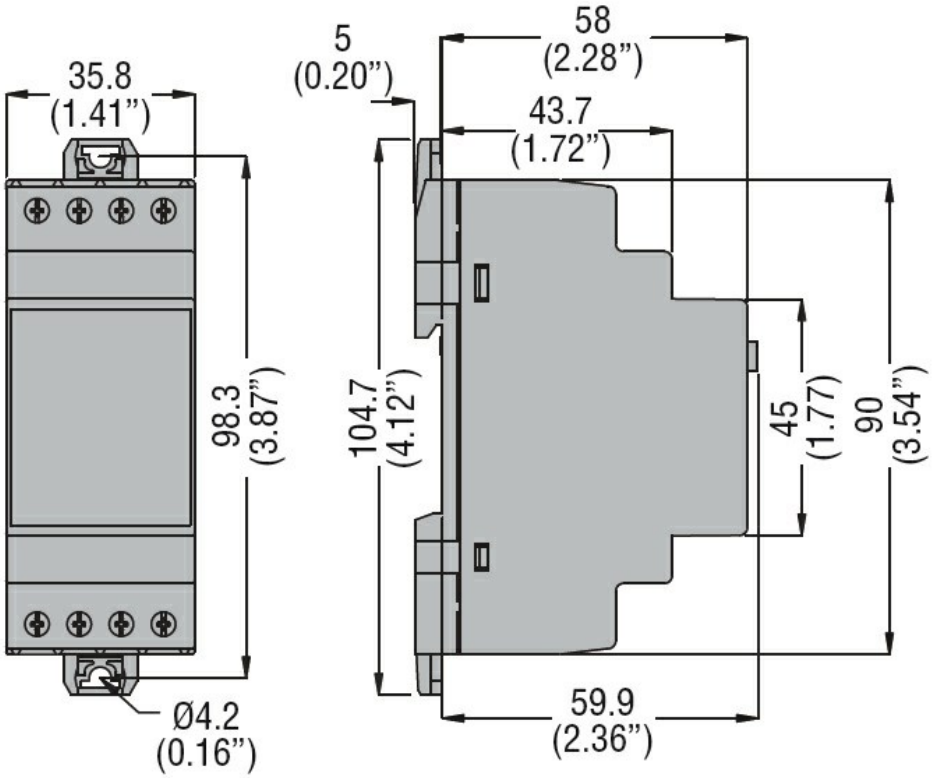

Wiring diagrams

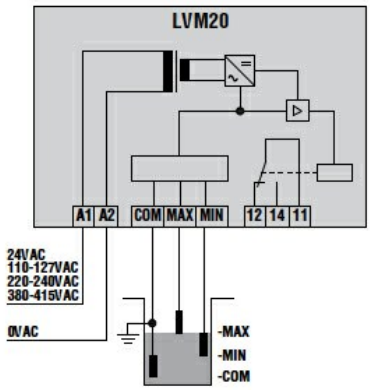

Certifications and compliance

Compliance

CSA C22.2 n° 14.
IEC/EN 60255-5
IEC/EN 61000-6-2
IEC/EN 61000-6-3
UL508

Certificates

cULus
EAC

The characteristics described in this document are subject to updates or modifications at any time. The descriptions, technical and functional information, illustrations and instructions in this brochure are purely illustrative, and are consequently not contractually binding