

Image may differ from product. See specification for details.

6313-2RS1

Deep groove ball bearing with seals or shields

Single row deep groove ball bearings with seals or shields are particularly versatile, have low friction and are optimized for low noise and low vibration, which enables high rotational speeds. They accommodate radial and axial loads in both directions, are easy to mount, and require less maintenance than many other bearing types. The integral sealing can significantly prolong bearing service life because it keeps lubricant in the bearings and contaminants out.

- Integral sealing prolongs bearing service life
- Simple, versatile and robust design
- Low friction and high-speed capability
- Accommodate radial and axial loads in both directions
- Require little maintenance

Overview

Dimensions

Bore diameter	65 mm
Outside diameter	140 mm
Width	33 mm

Performance

Basic dynamic load rating	97.5 kN
Basic static load rating	60 kN
Limiting speed	3 200 r/min
SKF performance class	SKF Explorer

Properties

Filling slots	Without
Number of rows	1
Locating feature, bearing outer ring	None
Bore type	Cylindrical
Cage	Sheet metal
Matched arrangement	No
Radial internal clearance	CN
Material, bearing	Bearing steel
Coating	Without
Sealing	Seal on both sides
Sealing type	Contact
Lubricant	Grease
Relubrication feature	Without
Indicative product carbon footprint to manufacture	7.56 kg CO_2e

Logistics

Product net weight	2.1 kg
eClass code	23-05-08-01
UNSPSC code	31171504

Technical specification

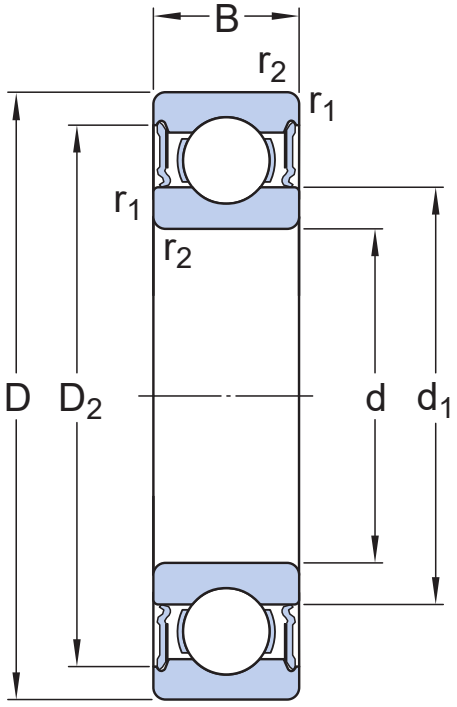

Dimensions

d	65 mm	Bore diameter
$t_{\Delta dmp}$	-0.012 – 0 mm	Deviation limits of mid-range bore diameter
D	140 mm	Outside diameter
$t_{\Delta Dmp}$	-0.015 – 0 mm	Deviation limits of mid-range outside diameter
B	33 mm	Width
$t_{\Delta Bs}$	-0.1 – 0 mm	Deviation limits of ring width
d_1	≈ 88.35 mm	Shoulder diameter
D_2	≈ 121.3 mm	Recess diameter
$r_{1,2}$	min. 2.1 mm	Chamfer dimension
	P6 and tighter width tolerance	ISO tolerance class for dimensions

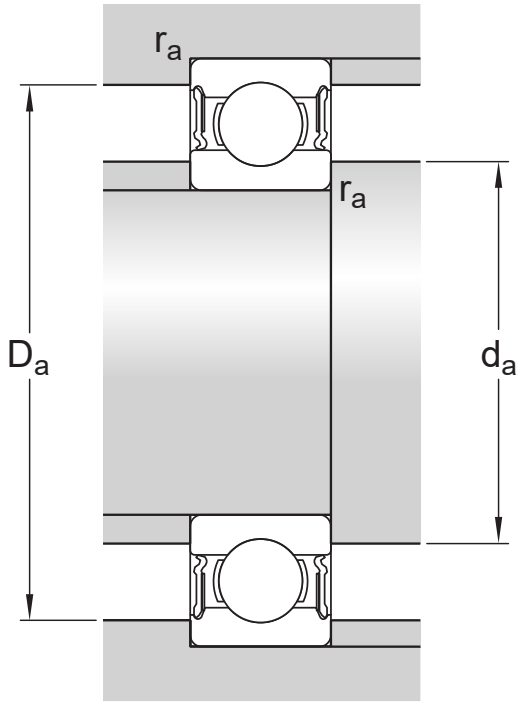

Abutment dimensions

d_a	min. 77 mm	Diameter of shaft abutment
d_a	max. 88.3 mm	Diameter of shaft abutment
D_a	max. 128 mm	Diameter of housing abutment
r_a	max. 2 mm	Radius of shaft or housing fillet

Calculation data

SKF performance class		SKF Explorer
Basic dynamic load rating	C	97.5 kN
Basic static load rating	C_0	60 kN
Fatigue load limit	P_u	2.5 kN
Limiting speed		3 200 r/min
Minimum load factor	k_r	0.03
Calculation factor	f_0	13.2

Tolerances of run-out

Range of section height at inner ring of assembled bearing	t_{Kia}	20 µm

Range of section height at outer ring of assembled bearing	t_{Kea}	40 µm
ISO tolerance class for geometrical tolerances		Normal

Tolerances and clearances

GENERAL BEARING SPECIFICATIONS

- Tolerances: Normal (metric), P6, P5, Normal (inch)
- Radial internal clearance: Classes C2 to C5

BEARING INTERFACES

- Seat tolerances for standard conditions
- Tolerances and resultant fits

More Information

Product details

- Single row deep groove ball bearings
- Stainless steel deep groove ball bearings
- Single row deep groove ball bearings with filling slots
- Double row deep groove ball bearings
- General bearing specifications
- Loads
- Temperature limits
- Permissible speed
- Designation system

Engineering information

- Principles of rolling bearing selection
- General bearing knowledge
- Bearing selection process
- Bearing interfaces
- Seat tolerances for standard conditions
- Selecting internal clearance
- Lubrication
- Sealing, mounting and dismounting
- Bearing failure and how to prevent it

Tools

- SKF Product select
- SimPro Quick
- Bearing Frequency Calculator
- LubeSelect for SKF greases
- Heater selection tool

Terms of use

By accessing and using this website / app owned and published by AB SKF (publ.) (556007-3495 · Gothenburg) (“SKF”), you agree to the following terms and conditions:

Warranty Disclaimer and Limitation of Liability

Although every care has been taken to assure the accuracy of the information on this website / app, SKF provides this information "AS IS" and DISCLAIMS ALL WARRANTIES, EXPRESS OR IMPLIED, INCLUDING, BUT NOT LIMITED TO, IMPLIED WARRANTIES OF MERCHANTABILITY AND FITNESS FOR A PARTICULAR PURPOSE. You acknowledge that your use of this website / app is at your sole risk, that you assume full responsibility for all costs associated with use of this website / app, and that SKF shall not be liable for any direct, incidental, consequential, or indirect damages of any kind arising out of your access to, or use of the information or software made available on this website / app.

Any warranties and representations in this website / app for SKF products or services that you purchase or use will be subject to the agreed upon terms and conditions in the contract for such product or service.

Further, for non-SKF websites / apps that are referenced in our website / app or where a hyperlink appears, SKF makes no warranties concerning the accuracy or reliability of the information in these websites / apps and assumes no responsibility for material created or published by third parties contained therein. In addition, SKF does not warrant that this website / app or these other linked websites / apps are free from viruses or other harmful elements.

Third Party Services

When viewing YouTube content via the SKF website(s) (i.e. using YouTube API Services), you agree to be bound by the YouTube Terms of Service.

Copyright

Copyright in this website / app copyright of the information and software made available on this website / app rest with SKF or its licensors. All rights are reserved. All licensed material will reference the licensor that has granted SKF the right to use the material. The information and software made available on this website / app may not be reproduced, duplicated, copied, transferred, distributed, stored, modified, downloaded or otherwise exploited for any commercial use without the prior written approval of SKF. However, it may be reproduced, stored and downloaded for use by individuals without prior written approval of SKF. Under no circumstances may this information or software be supplied to third parties.

This website /app includes certain images used under license from Shutterstock, Inc.

Trademarks and Patents

All trademarks, brand names, and corporate logos displayed on the website / app are the property of SKF or its licensors, and may not be used in any way without prior written approval by SKF. All licensed trademarks published on this website / app reference the licensor that has granted SKF the right to use the trademark. Access to this website / app does not grant to the user any license under any patents owned by or licensed to SKF.

Changes

SKF reserves the right to make changes or additions to this website / app at any time.