

Ultrasonic sensor

UC800-F77S-IU-IO-V31

- IO-Link interface for parameterization
- Programmable via DTM with PACTWARE
- Selectable sound lobe width
- Synchronization options
- Temperature compensation
- Analog output

Single head system

Dimensions

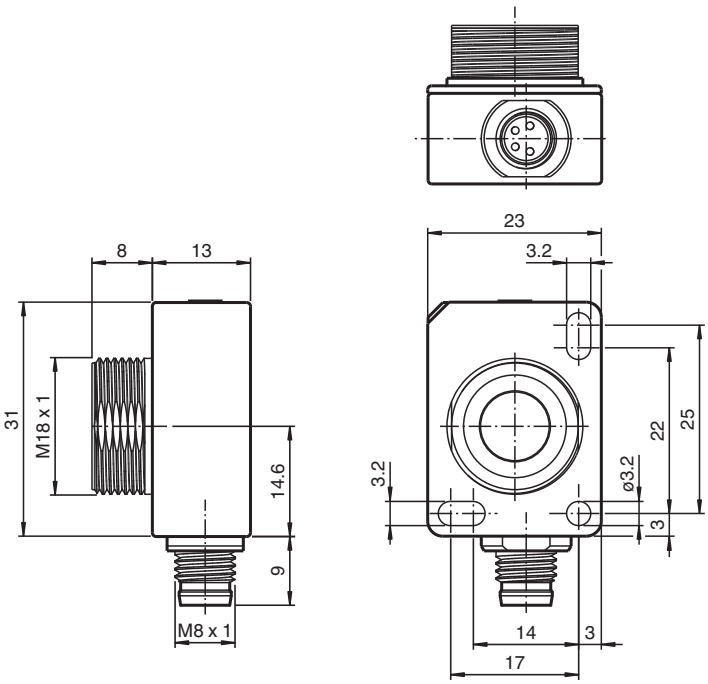

Technical Data

General specifications	
Sensing range	60 ... 800 mm
Adjustment range	70 ... 800 mm
Dead band	0 ... 60 mm
Standard target plate	100 mm x 100 mm
Transducer frequency	approx. 255 kHz
Response delay	minimum : 13 ms factory setting: 49 ms
Sensor cycle time	≥ 13 ms (factory setting) ; programmable to 60 s
Memory	
Non-volatile memory	EEPROM

Release date: 2025-02-06 Date of issue: 2025-02-06 Filename: 261248_eng.pdf

Technical Data

Write cycles		300000
Indicators/operating means		
LED green		solid: power on flashing: standby mode or IO-Link communication
LED yellow		solid: object in evaluation range flashing: programming of the limits, object detected
LED red		solid: fault flashing: programming limits, object not detected
Electrical specifications		
Operating voltage	U_B	18 ... 30 V DC , ripple 10 $\%_{SS}$
No-load supply current	I_0	≤ 50 mA
Power consumption	P_0	≤ 500 mW
Time delay before availability	t_v	≤ 300 ms
Interface		
Interface type		IO-Link (available after activation via programming button until next reset)
Input/Output		
Input/output type		1 synchronization connection, bidirectional
0 Level		0 ... 1 V
1 Level		2.5 V ... U_B
Input impedance		> 22 kΩ
Output current		current source < 2.5 mA
Pulse length		≥ 1 ms with external control, low active
Synchronization frequency		
Common mode operation		≤ 82 Hz
Multiplex operation		≤ 82 Hz / n , n = number of sensors , n ≤ 10
Output		
Output type		1 analog output 0 (4) ... 20 mA or 1 analog output 0 ... 10 V
Resolution		current output: evaluation range [mm]/3200 but ≥ 0.35 mm voltage output: evaluation range [mm]/4000 but ≥ 0.35 mm
Deviation of the characteristic curve		≤ ± 1 % of full-scale value
Repeat accuracy		≤ ± 0.1 % of full-scale value
Load impedance		current output: ≤ 500 Ohm voltage output: ≥ 1000 Ohm
Temperature influence		≤ ± 0.75 % of the end value (with temperature compensation) from 10 minutes after switching on the sensor ; 0.17 %/K (without temperature compensation)
Compliance with standards and directives		
Standard conformity		
Standards		EN IEC 60947-5-2:2020 IEC 60947-5-2:2019 EN 60947-5-7:2003 IEC 60947-5-7:2003 IEC 61131-9:2013
Approvals and certificates		
UL approval		cULus Listed, Class 2 Power Source
CCC approval		CCC approval / marking not required for products rated ≤36 V
Ambient conditions		
Ambient temperature		current output -25 ... 60 °C (-13 ... 140 °F) voltage output -25 ... 70 °C (-13 ... 158 °F) When fixing with one M18 nut, the temperature range for each begins with 0 °C (32 °F).
Storage temperature		-40 ... 85 °C (-40 ... 185 °F)
Mechanical specifications		
Connection type		Connector plug M8 x 1 , 4-pin
Degree of protection		IP67
Material		

Release date: 2025-02-06 Date of issue: 2025-02-06 Filename: 261248_eng.pdf

Technical Data

Housing		Polycarbonate
Transducer		epoxy resin/hollow glass sphere mixture; polyurethane foam
Installation position		any position
Mass		13 g
Tightening torque, fastening screws		with M3 nuts max. 0.2 Nm with M18 nuts max. 1 Nm
Dimensions		
Height		31 mm
Width		21 mm
Length		23 mm
Factory settings		
Output		near limit: 70 mm far limit: 800 mm Output mode: rising ramp output type: 4 ... 20 mA
Beam width		wide
General information		
Scope of delivery		1 Nut plastic

Connection

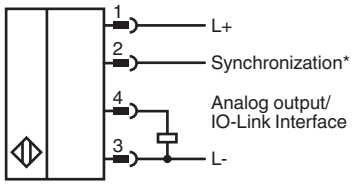

*if not used connect to ground (0V)

Connection Assignment



Wire colors in accordance with EN 60947-5-2

1	BN	(brown)
2	WH	(white)
3	BU	(blue)
4	BK	(black)

Release date: 2025-02-06 Date of issue: 2025-02-06 Filename: 261248_eng.pdf

Characteristic Curve

Characteristic response curve

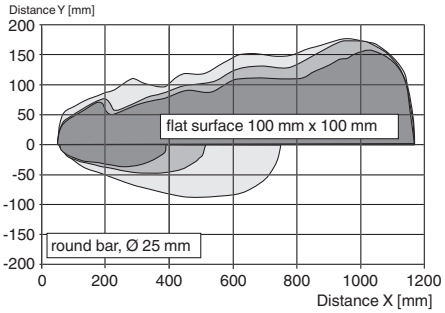



Analog output modes

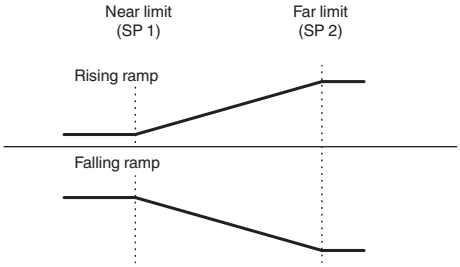

Release date: 2025-02-06 Date of issue: 2025-02-06 Filename: 261248_eng.pdf

Function

Adjustment possibilities

The sensor features an analog output with 2 programmable limits. Programming the limits, the output mode, the output type and the beam width can be done in two different ways:

- Using the sensor's programming button
- Using the IO-link interface of the sensor. This method requires an IO-link master (e.g. IO-link-Master02-USB) and the associated software. The download link is available on the product page for the sensor at www.pepperl-fuchs.de

Synchronization

The sensor features a synchronization input for suppressing ultrasonic mutual interference („cross talk").
The following synchronization modes are available:

1. Automatic multiplex mode.
2. Automatic common mode
3. Externally controlled synchronization

Further Documentation

- For information on programming via programming button and synchronisation you may refer to the commissioning instruction.
- For detailed information on application and programming via IO-Link we provide a manual.

Release date: 2025-02-06 Date of issue: 2025-02-06 Filename: 261248_eng.pdf