E11893

Mounting adapter for Bosch Rexroth pneumatic cylinders

ADAPT FOR CYL BOSCH 2700

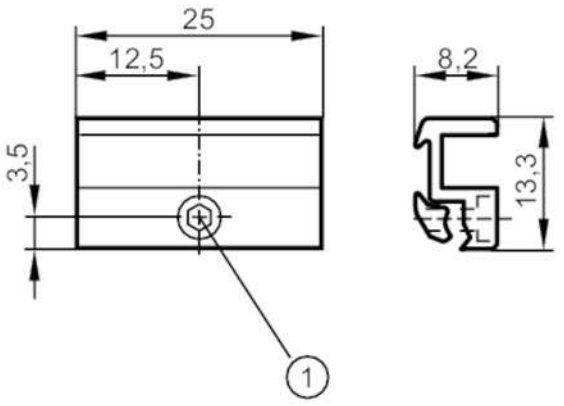

1 Mounting screw SW 1.5

Application		
Design		for types MKT
Mechanical data		
Weight	[g]	5.2
Type of mounting		for series: Bosch 2700
Dimensions	[mm]	13.3 x 25 x 8.2
Materials		Adapter: aluminium; screw: stainless steel
Remarks		
Pack quantity		1 pcs.