IE5428

Inductive sensor

IEK2002BFRKG/0,20M/PH/MOLEX

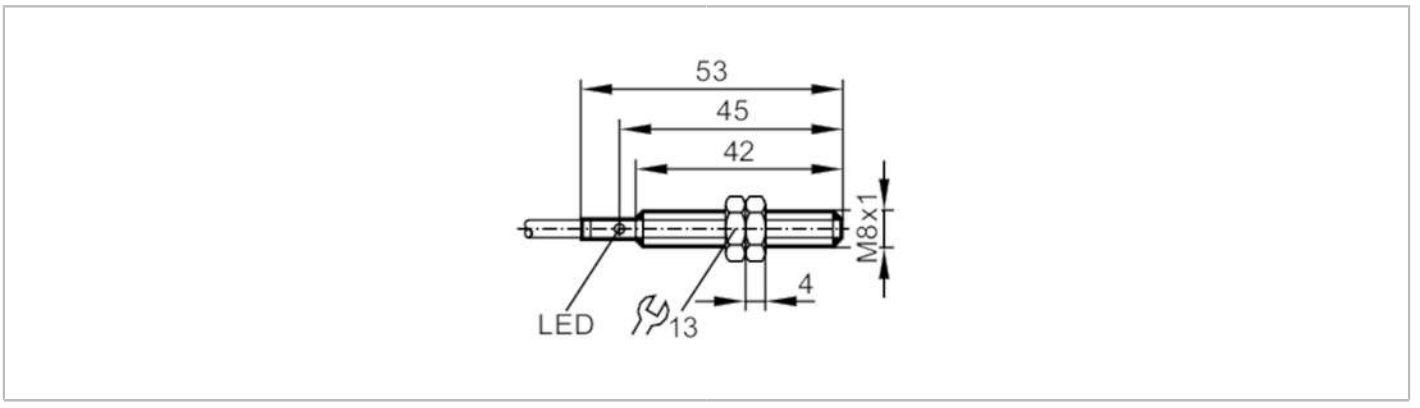

Product characteristics		
Electrical design		PNP/NPN
Output function		normally open / normally closed; (selectable)
Sensing range	[mm]	2
Housing		threaded type
Dimensions	[mm]	M8 x 1 / L = 53
Electrical data		
Operating voltage	[V]	5...36 DC
Protection class		III
Outputs		
Electrical design		PNP/NPN
Output function		normally open / normally closed; (selectable)
Max. voltage drop switching output DC	[V]	4.6
Minimum load current	[mA]	4
Permanent current rating of switching output DC	[mA]	200
Switching frequency DC	[Hz]	1000
Short-circuit protection		yes
Overload protection		yes
Detection zone		
Sensing range	[mm]	2
Operating distance	[mm]	0...1.62
Accuracy / deviations		
Correction factor		steel: 1 / stainless steel: 0.7 / brass: 0.5 / aluminium: 0.4 / copper: 0.3
Hysteresis	[% of Sr]	1...20
Operating conditions		
Ambient temperature	[°C]	-25...80
Protection		IP 67

IE5428

Inductive sensor

IEK2002BFRKG/0,20M/PH/MOLEX

Tests / approvals			
EMC		EN 61000-4-2 ESD	4 kV CD / 8 kV AD
		EN 61000-4-3 HF radiated	10 V/m
		EN 61000-4-4 Burst	2 kV
		EN 61000-4-6 HF conducted	10 V
		EN 55011 emission	class B
MTTF	[years]	3377	
Mechanical data			
Weight	[g]	23.7	
Housing		threaded type	
Mounting		flush mountable	
Dimensions	[mm]	M8 x 1 / L = 53	
Thread designation		M8 x 1	
Materials		threaded sleeve: brass white bronze coated; sensing face: LCP black	
Tightening torque	[Nm]	A = 5 mm: 1 Nm; B: 2 Nm	
Displays / operating elements			
Display		switching status	1 x LED, yellow
Accessories			
Items supplied		lock nuts: 2	
Remarks			
Pack quantity		1 pcs.	
Electrical connection			

Cable: 0.2 m, PUR; 2 x 0.14 mm²

Connection

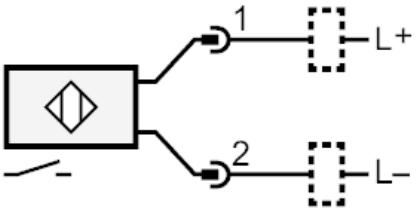

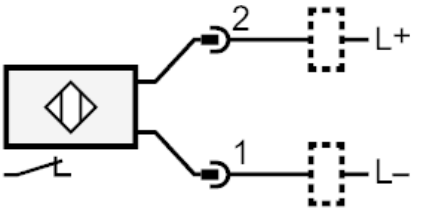

Connector: 1 x MOLEX ((39-01-2021))



IE5428

Inductive sensor

IEK2002BFRKG/0,20M/PH/MOLEX

Connection

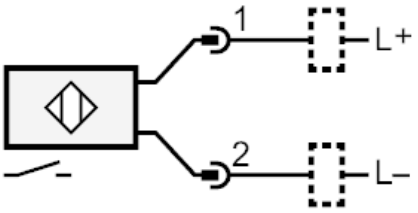

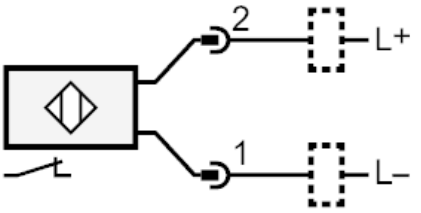

Diagrams and graphs

Installation

