Force-GT DIN Rail Power Supply

24 V 480 W 3 Phase / DRF-24V480W3GBA



FORCE-GT

Highlights & Features

- Universal AC input voltage range
- Built-in constant current circuit for charging applications
- Full load operating temperature up to 55°C
- Cold start at -40°C
- Ultra-Slim design
- Reduced no-load power consumption
- Built-in DC OK relay and LED indicator
- Conformal coating on PCBAs to protect against common dust and pollutants

Safety Standards

CB Certified for worldwide use

Model Number: DRF-24V480W3GBA
Unit Weight: 1.20 kg (2.65 lb)
Dimensions (H x W x D): 124 x 65 x 127.3 mm (4.88 x 2.56 x 5.01 inch)

General Description

The Force-GT Series DIN rail industrial power supply features high power density and high efficiency. The Series offers overcurrent protection in constant current mode, making it suitable for charging applications. Conformal coating is applied on the PCBAs to protect against dust and pollutants often found in harsh industrial environments. The Series' electromagnetic radiated and conducted emissions are compliant with heavy industrial Class B Emission standard and Immunity standard, and complies with environmental protection standards RoHS Directive.

Model Information

Force-GT DIN Rail Power Supply

Model Number	Input Voltage Range	Rated Output Voltage	Rated Output Current
DRF-24V480W3GBA	3 x 320-575 Vac (3-Phase) or 2 x 340-575 Vac (2-Phase)	24 Vdc	20.0 A

Model Numbering

DR	F –	24V	480W	3	G	B	A
DIN Rail	Product Series F – Force	Output Voltage	Output Power	Three Phase	G – General Type	B – Screw Terminal	Delta Standard

All parameters are specified at 25°C ambient and AC input 3x unless otherwise indicated.
www.DeltaPSU.com (April 2023, Rev. 02)

Force-GT DIN Rail Power Supply
24 V 480 W 3 Phase / DRF-24V480W3GBA

Specifications

Input Ratings / Characteristics

Nominal Input Voltage		3 x 380-500 Vac
Input Voltage Range		3 x 320-575 Vac (3-Phase) or 2 x 340-575 Vac (2-Phase)*1
Nominal Input Frequency		50-60 Hz
Input Frequency Range		47-63 Hz
DC Input Voltage Range*2		450-800 Vdc
Input Current		< 0.85 A @ 3 x 400 Vac, < 0.73 A @ 3 x 500 Vac
Efficiency at 100% Load		94.0% typ. @ 3 x 400 Vac & 500 Vac
Average Efficiency (25%, 50%, 75%, 100%)		92.0% typ. @ 3 x 400 Vac & 500 Vac
Max Power Dissipation	0% load	< 7.0 W @ 3 x 400 Vac & 3 x 500 Vac
	100% load	< 33.0 W @ 3 x 400 Vac & 3 x 500 Vac
Max Inrush Current (Cold Start)		35 A typ. @ 3 x 400 Vac & 3 x 500 Vac
Power Factor at 100% Load		> 0.90 @ 3 x 400 Vac, > 0.88 @ 3 x 500 Vac
Leakage Current		< 3.5 mA @ 3 x 500 Vac

*1 For 2-Phase input, see power de-rating on page 3.
*2 Power supply can operate at DC input.

Output Ratings / Characteristics*3

Nominal Output Voltage		24 Vdc
Factory Set Point Tolerance		24 Vdc ± 2%
Output Voltage Adjustment Range		24-28 Vdc
Output Current		0-20.0 A (480 W max)
Output Power		480 W max
Line Regulation		< 40 mV (@ 3 x 320-575 Vac input, 100% load)
Load Regulation		< 200 mV (@ 3 x 320-575 Vac input, 0-100% load)
PARD*4 (20 MHz)		< 150 mVpp
Rise Time		100 ms typ. @ nominal input (100% load)
Start-up Time		1,000 ms typ. @ nominal input (100% load)
Hold-up Time		20 ms typ. @ 3 x 400 Vac & 500 Vac (100% load)
Dynamic Response (Overshoot & Undershoot O/P Voltage)		± 5% @ 3 x 320-575 Vac input, 1.5-100% load (Slew Rate: 0.1 A/μs, 50% duty cycle @ 5 Hz to 1 kHz)
Start-up with Capacitive Loads		20,000 μF Max
Functional	DC OK Relay Contact	Rated: 30 V at 1 A, resistive load. Refer to the details in the Function section at DC OK Relay Contacts and LED Indicator Characteristics on page 11.

*3 For power de-rating from 55°C to 70°C, see power de-rating on page 3.
*4 PARD is measured with an AC coupling mode, 5 cm wires, and in parallel to end terminal with 0.1 μF ceramic capacitor & 47 μF electrolytic capacitor.

Force-GT DIN Rail Power Supply
24 V 480 W 3 Phase / DRF-24V480W3GBA

Mechanical

Case Cover / Chassis		Aluminum
Dimensions (H x W x D)		124 x 65 x 127.3 mm (4.88 x 2.56 x 5.01 inch)
Unit Weight		1.20 kg (2.65 lb)
Indicator	Green LED	DC OK
Cooling System		Convection
Terminal*5	Input	4 Pins (Rated 600 V / 30 A)
	Output	4 Pins (Rated 600 V / 30 A)
	Signal	2 Pins (Rated 300 V / 12 A)
Wire	Input	AWG 18-10
	Output	AWG 12-10
	Signal	AWG 20-16
Mounting Rail		Standard TS35 DIN Rail in accordance with EN 60715
Noise (1 Meter from power supply)		Sound Pressure Level (SPL) < 25dBA

*5 The torque at the terminal connector shall not exceed 5.4Kgf.cm. (4.7 lbf.in).

Environment

Surrounding Air Temperature	Operating	**3-Phase** -25°C to +70°C (-40°C Cold Start) **2-Phase** -25°C to +60°C (-40°C Cold Start)	
	Storage	-40°C to +85°C	
Power De-rating	Vertical Mounting	> 55°C de-rate power by 3.33% / °C	
	Horizontal Mounting	> 25°C de-rate power by 2.5% / °C	
	Input Voltage	**2-Phase** 2 x 340-575 Vac de-rate power to 80%	
Operating Humidity		5 to 95% RH (Non-Condensing)	
Operating Altitude and Over Voltage Category	OVC III	0 to 2,500 Meters (8,200 ft.)	According to IEC/EN 62477-1 / EN 60204-1 (clearance and creepage distances) and IEC 62103 (safety part)
	OVC II	2,500 to 6,000 Meters (19,680 ft.)	
		0 to 5,000 Meters (16,400 ft.)	According to IEC/EN 62368-1, IEC/EN 61010
Shock Test	Non-Operating	IEC 60068-2-27, Half Sine Wave: 50 G for duration of 11 ms; 3 times per direction	
Vibration	Operating	IEC 60068-2-6, Sine Wave: 10-500 Hz; 3G peak; 60 min per axis for all X, Y, Z directions	
Pollution Degree		2	

Force-GT DIN Rail Power Supply
24 V 480 W 3 Phase / DRF-24V480W3GBA

Protections

Overvoltage	< 35 V, Hiccup Mode, Non-Latching (Auto-Recovery)
Overload / Overcurrent	110 – 150% of rated load current, Auto-recovery Continuous current limit Mode*6 (Vo > 18 Vdc)
Over Temperature	60°C-80°C Surrounding Air Temperature @ 100% load, Non-Latching (Auto-Recovery)
Short Circuit	Hiccup Mode, Non-Latching (Auto-Recovery when the fault is removed)
Internal Fuse	T 3.15 A
Degree of Protection	IP20
Protection Against Shock	Class I with PE*7 connection

*6 Constant current limit protection for inductive and capacitive load applications
*7 PE: Primary Earth

Reliability Data

MTBF	Telcordia SR-332	> 600,000 hrs. I/P: 3 x 400 Vac & 3 x 500 Vac, O/P: 100% load, Ta: 25°C
Expected Cap Life Time	10 Years	I/P: 3 x 400 Vac & 3 x 500 Vac, O/P: 24 V, 10 A, Ta: 40°C

Safety Standards / Directives

Electrical Equipment of Machines		EN/BS EN 60204-1 (over voltage category III)
Electrical Equipment for Use in Electrical Power Installations		IEC/EN/BS EN 62477-1 / IEC 62103
Safety Entry Low Voltage		SELV (IEC 60950-1)
Electrical Safety	SIQ Bauart	EN 62368-1, EN 61010-1, EN 61010-2-201
	UL/cUL recognized	UL 62368-1 and CSA C22.2 No. 62368-1 (File No. E191395)
	CB scheme	IEC 60950-1, IEC 62368-1, IEC 61010-1, IEC 61010-2-201
	UKCA	BS EN 62368-1, BS EN 61010-1, BS EN 61010-2-201
Electrical Equipment for Measurement, Control, and Laboratory Use	UL/cUL listed	UL 61010-1, UL 61010-2-201 (File No. E315355)
CE		In conformance with EMC Directive 2014/30/EU and Low Voltage Directive 2014/35/EU
UKCA		In conformance with Electrical Equipment (Safety) Regulations 2016 No. 1011 and The Electromagnetic Compatibility Regulations 2016 No. 1091
Galvanic Isolation	Input to Output	4.0 kVac
	Input to Ground	2.0 kVac
	Output to Ground	1.5 kVac
	DC OK relay contact to Output	0.5 kVac
	DC OK relay contact to Ground	1.5 kVac

Force-GT DIN Rail Power Supply
24 V 480 W 3 Phase / DRF-24V480W3GBA

EMC*8

Emissions (CE & RE)		Generic Standards: EN/BS EN 61000-6-3, CISPR 32, EN/BS EN 55032, KS C 9832, FCC Title 47: Class B		
Component Power Supply for General Use		EN/BS EN 61204-3		
Immunity		Generic Standards: EN/BS EN 55024, EN/BS EN 55035, KS C 9835, EN/BS EN 61000-6-1		
Electrostatic Discharge	IEC 61000-4-2	Level 4 Criteria A[1)] Air Discharge: 15 kV Contact Discharge: 8 kV		
Radiated Field	IEC 61000-4-3	Level 3 Criteria A[1)] 80 MHz – 1GHz, 10 V/M, 80% Modulation (1 kHz) 1.4 GHz – 2GHz, 10 V/M, 80% Modulation (1 kHz) 2 GHz – 6GHz, 10 V/M, 80% Modulation (1 kHz)		
Electrical Fast Transient / Burst	IEC 61000-4-4	Level 4 Criteria A[1)] 4 kV		
Surge	IEC 61000-4-5	Level 4 Criteria A[1)] Common Mode[3)]: 4 kV Differential Mode[4)]: 2 kV		
Conducted	IEC 61000-4-6	Level 3 Criteria A[1)] 150 kHz – 80 MHz, 10 Vrms		
Power Frequency Magnetic Fields	IEC 61000-4-8	Level 4 Criteria A[1)] 30 A/m		
Voltage Dips and Interruptions	IEC 61000-4-11	0% of 3 x 380 Vac 0% of 3 x 480 Vac	0 Vac, 20 ms 0 Vac, 20 ms	Criteria A[1)] Criteria A[1)]
		40% of 2 x 380 Vac 40% of 2 x 480 Vac 70% of 2 x 380 Vac 70% of 2 x 480 Vac 0%	152 Vac, 200 ms 192 Vac, 200 ms 266 Vac, 500 ms 336 Vac, 500 ms 0 Vac, 5,000 ms	Criteria A[1)] Criteria A[1)] Criteria A[1)] Criteria A[1)] Criteria B[2)]
Low Energy Pulse Test (Ring Wave)	IEC 61000-4-12	Level 3 Criteria A[1)] Common Mode[3)] : 2kV Differential Mode[4)] : 1kV		
Harmonic Current Emission		IEC/EN/BS EN 61000-3-2, Class A		
Voltage Fluctuation and Flicker		IEC/EN/BS EN 61000-3-3		
Voltage Sag Immunity SEMI F47 – 0706		80% of 380 Vac 70% of 380 Vac 50% of 380 Vac	304 Vac, 1,000 ms 266 Vac, 500 ms 190 Vac, 200 ms	Criteria A[1)] Criteria A[1)] Criteria A[1)]

1) Criteria A: Normal performance within the specification limits
2) Criteria B: Temporary degradation or loss of function which is self-recoverable
3) Asymmetrical: Common mode (Line to earth)
4) Symmetrical: Differential mode (Line to line)

*8 Power supply is considered a component in the end-user's system. Please contact our local sales to get more information about the power supply EMC test setup.

Force-GT DIN Rail Power Supply
24 V 480 W 3 Phase / DRF-24V480W3GBA

Block Diagram

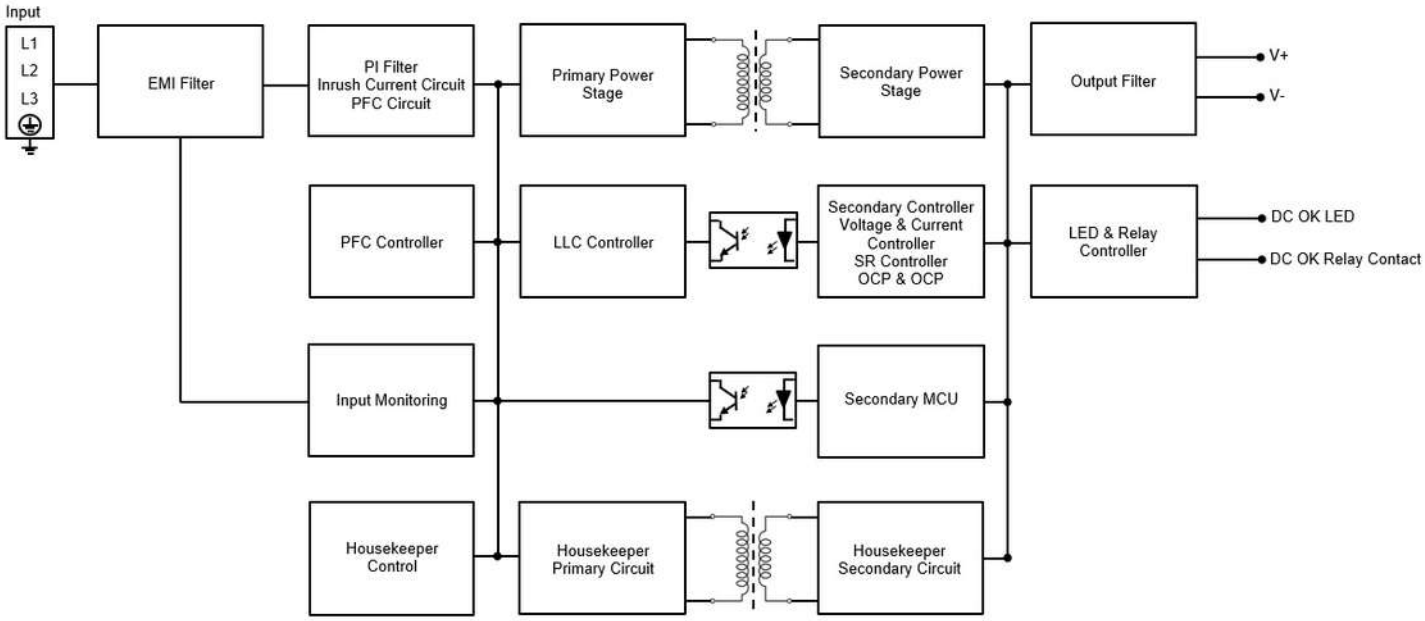

Device Description

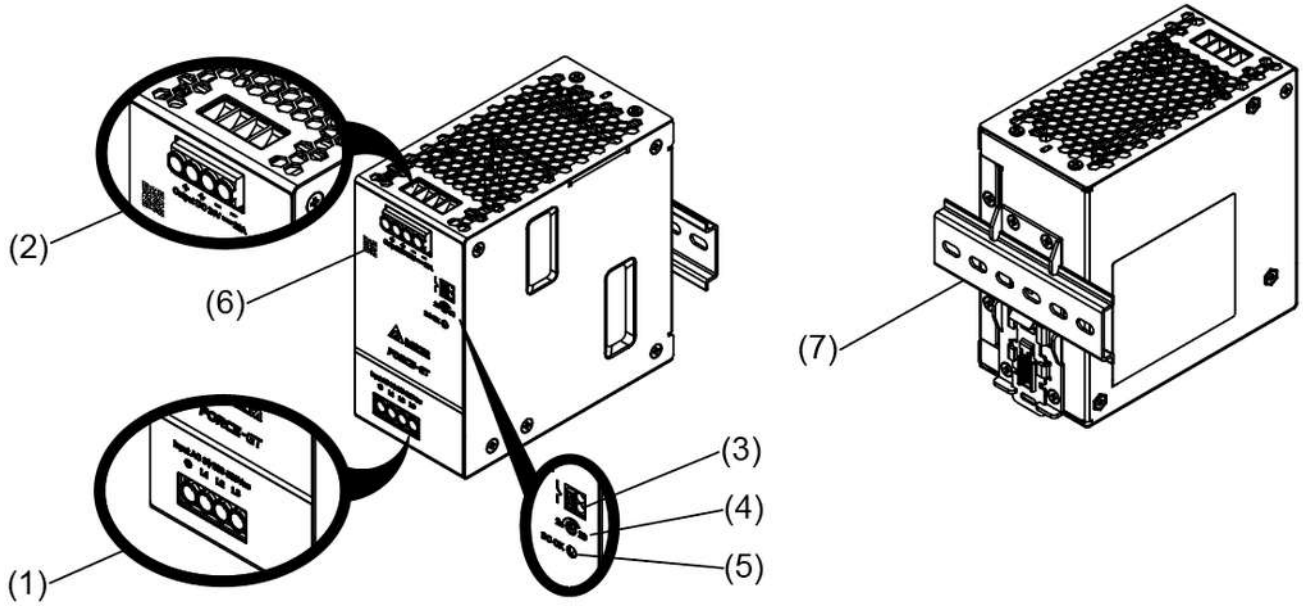

1) Input terminal block connector
2) Output terminal block connector
3) DC OK relay contact
4) DC voltage adjustment potentiometer
5) DC OK LED (Green)
6) QR code for product link
7) Universal mounting rail system

All parameters are specified at 25°C ambient and AC input 3x unless otherwise indicated.
www.DeltaPSU.com (April 2023, Rev. 02)

Force-GT DIN Rail Power Supply
24 V 480 W 3 Phase / DRF-24V480W3GBA

Dimensions

H x W x D: 124 x 65 x 127.3 mm (4.88 x 2.56 x 5.01 inch)

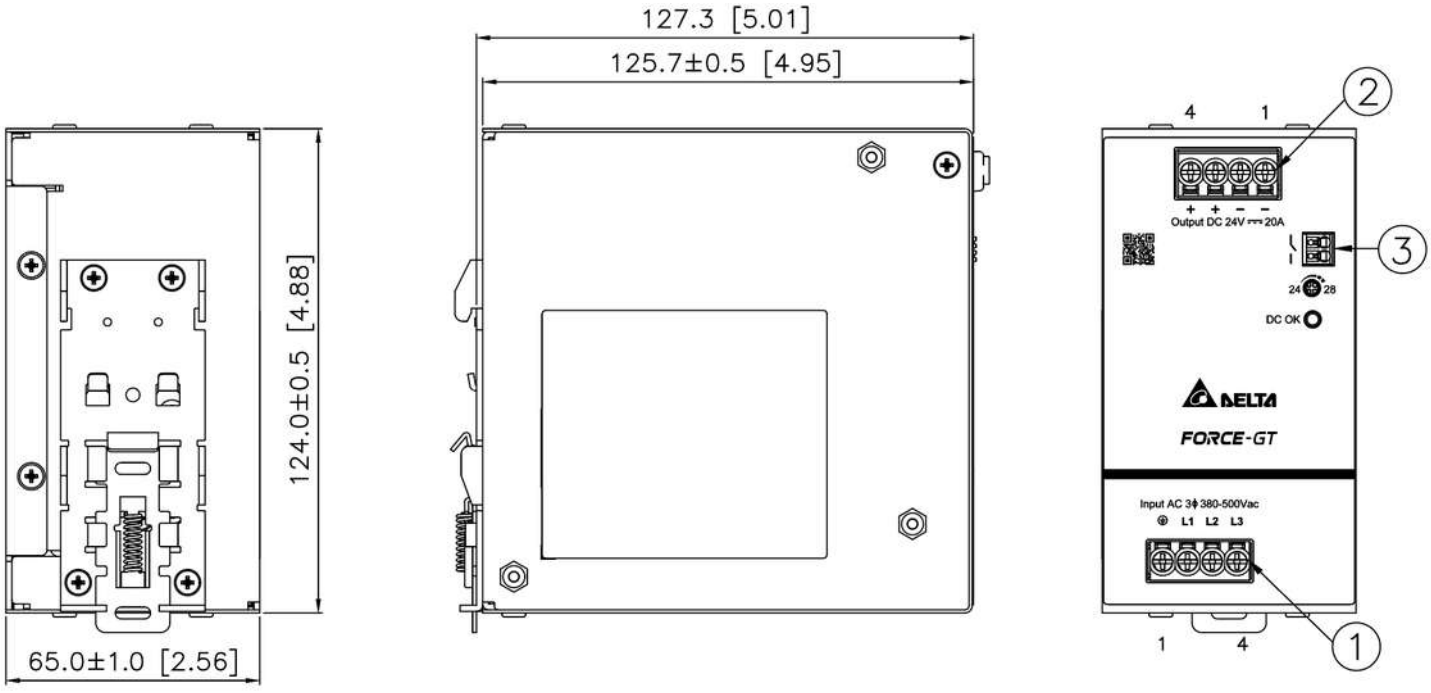

Item	Device Description
1	Input terminal block connector Pin 1: PE Pin 2: L1 Pin 3: L2 Pin 4: L3
2	Output terminal block connector Pin 1 to 2: V(-) Pin 3 to 4: V(+)
3	DC OK relay contact

AWG Wire Table

Current Rating for PVC Wire	
6 AWG	52.5 A
8 AWG	37.5 A
10 AWG	29.0 A
12 AWG	22.5 A
14 AWG	16.5 A
16 AWG	12.0 A
18 AWG	9.0 A
20 AWG	6.5 A
22 AWG	5.0 A
24 AWG	3.5 A
26 AWG	2.5 A
28 AWG	2.0 A
30 AWG	1.5 A

Force-GT DIN Rail Power Supply
24 V 480 W 3 Phase / DRF-24V480W3GBA

Engineering Data

Output Load De-rating VS Surrounding Air Temperature

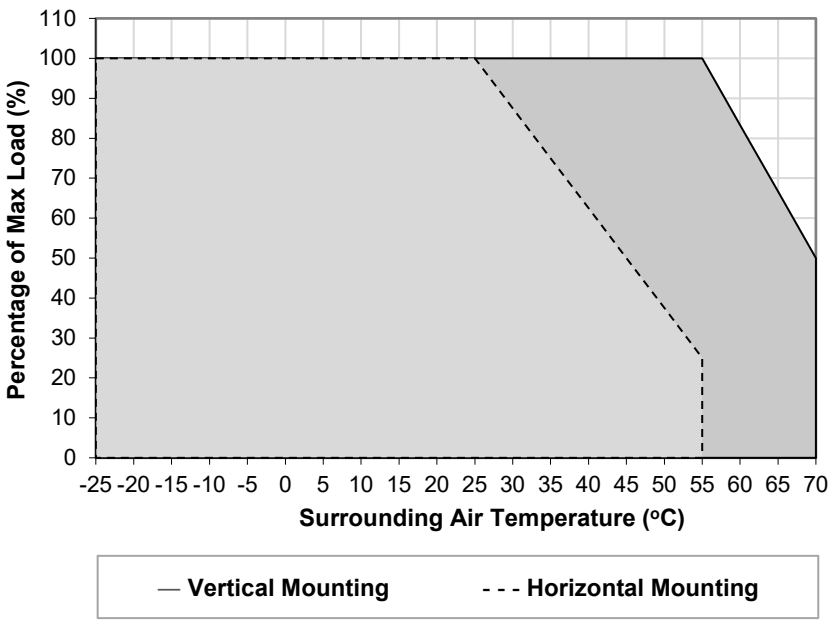

Fig. 1 **De-rating for Vertical Mounting Orientation**
> 55°C (3.33% / °C) in Vertical

De-rating for Horizontal Mounting Orientation
> 25°C (2.5% / °C) in Horizontal

Note

1. Power supply components may degrade, or be damaged, when the power supply is continuously used outside the shaded region, refer to the graph shown in Fig. 1.
2. If the output capacity is not reduced when the surrounding air temperature exceeds its specification as defined on Page 3 under “Environment”, the device will run into Over Temperature Protection. When activated, the output voltage will go into bouncing mode and will recover when the surrounding air temperature is lowered or the load is reduced as far as necessary to keep the device in working condition.
3. In order for the device to function in the manner intended, it is also necessary to keep a safety distance as recommended in the safety instructions while the device is in operation.
4. Depending on the surrounding air temperature and output load delivered by the power supply, the device can be very hot!
5. If the device has to be mounted in any other orientation, please contact **info@deltapsu.com** for more details.

Output Load De-rating VS Input Voltage

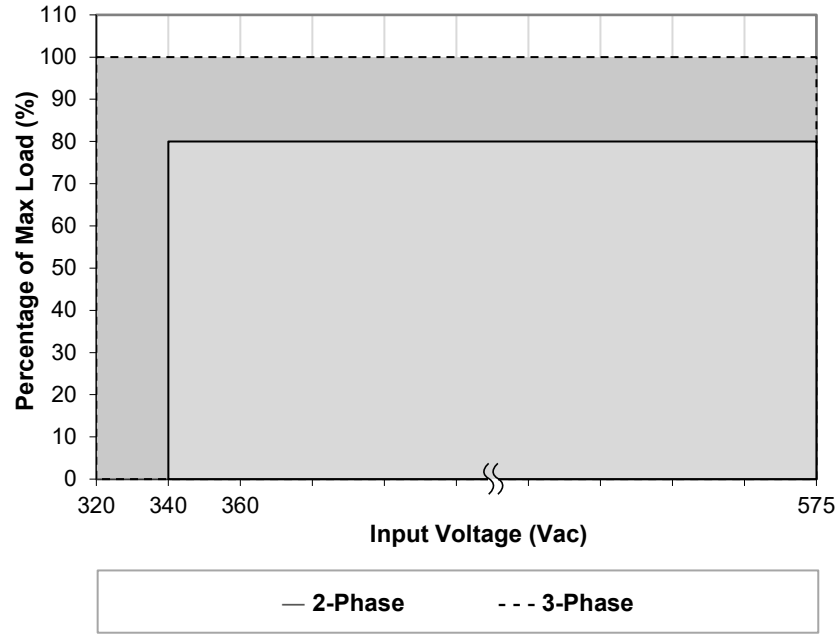

- No output power de-rating across the entire 3-Phase input voltage range
- Output power de-rating to 80% across the entire 2-Phase input voltage range

Fig. 2 **De-rating for AC Input Voltage**
2 x 340-575 Vac de-rate power to 80%

Force-GT DIN Rail Power Supply
24 V 480 W 3 Phase / DRF-24V480W3GBA

Assembly & Installation

The power supply unit (PSU) can be mounted on 35 mm DIN rails in accordance with EN 60715. The device should be installed with input terminal block at the bottom.

Each device is delivered ready to install.

1. Tilt the unit upwards and insert it onto the DIN rail. Snap on the DIN rail as shown in Fig. 3.1.
2. Push downwards until stopped.
3. Press against the bottom front side for locking.
4. Shake the unit slightly to ensure that it is secured.
5. To uninstall, pull or slide down the latch with screw driver as shown in Fig. 3.2. Then slide the power supply unit (PSU) in the opposite direction, release the latch and pull out the power supply unit (PSU) from the rail.

Mounting

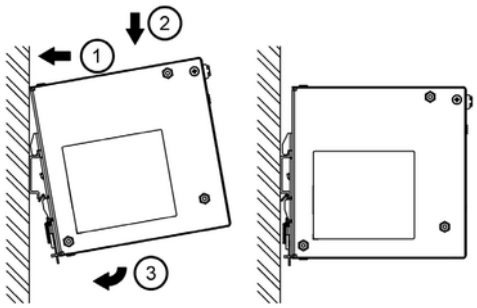

Fig. 3.1 Mounting

Dismounting

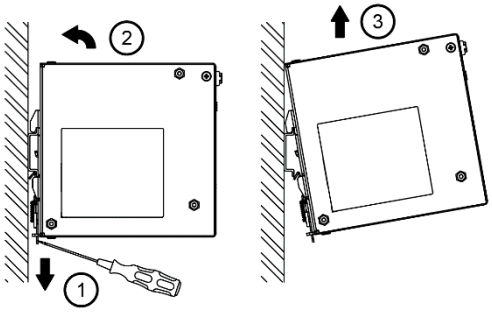

Fig. 3.2 Dismounting

In accordance to IEC/EN/UL/CSA 62368-1 and IEC/EN/UL/CSA 61010-2-201, flexible cables require ferrules.
Use appropriate copper cables designed to sustain operating temperature of:

- At least 75°C for ambient < 25°C
- At least 90°C for ambient < 70°C.

Force-GT DIN Rail Power Supply
24 V 480 W 3 Phase / DRF-24V480W3GBA

Safety Instructions

■ **Vertical Mounting**

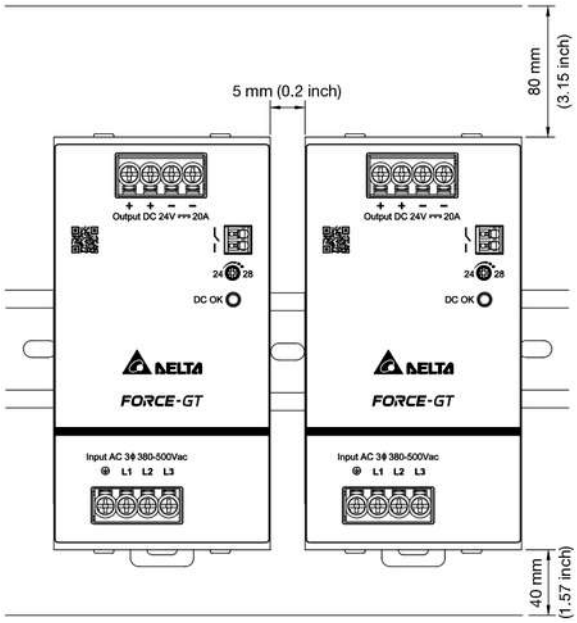

■ **Horizontal Mounting**

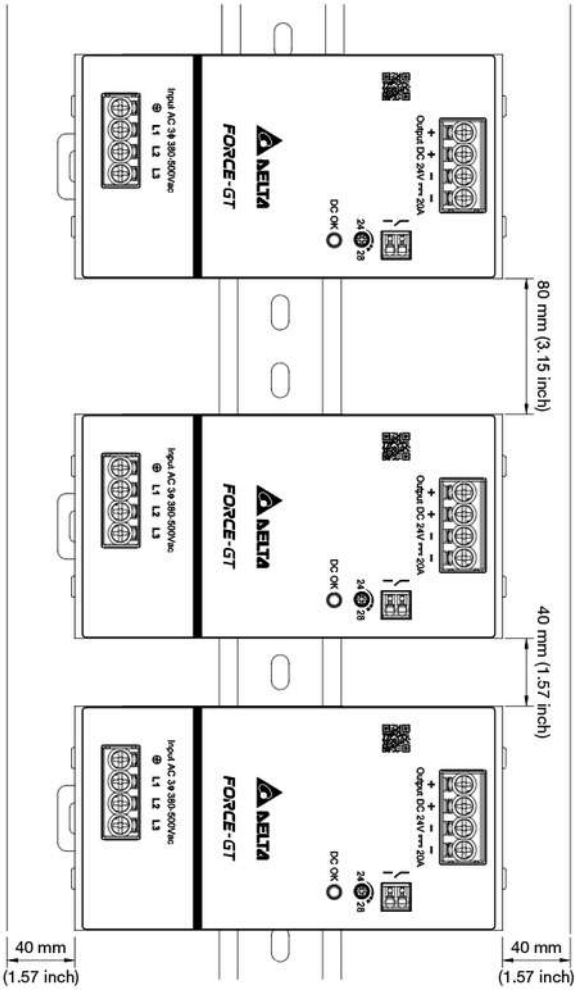

- ALWAYS switch mains of input power OFF before connecting and disconnecting the input voltage to the unit. If mains are not turned OFF, there is risk of explosion / severe damage.
- **To guarantee sufficient convection cooling, please refer to the following instructions to ensure sufficient clearance around the device.**
  Vertical Mounting: 80 mm (3.15 inch) above and 40 mm (1.57 inch) below the device as well as a lateral distance of 5 mm (0.20 inch) to other units. In case the adjacent device is a heat source (50% load of 480 W), the lateral distance will be 50 mm (1.97 inch).
  Horizontal Mounting: 80 mm (3.15 inch) above and 40 mm (1.57 inch) below the device as well as a lateral distance of 40 mm (1.57 inch) to other units.
- The external enclosure where the unit will be installed shall meet the requirements for mechanical, electrical and fire enclosure.
- Note that the enclosure of the device can become very hot depending on the surrounding air temperature and load of the power supply. Risk of burns!
- The main power must be turned off before connecting or disconnecting wires to the terminals.
- DO NOT insert any objects into the unit.
- Hazardous voltages may be present for up to 5 minutes after the input mains voltage is disconnected. Do not touch the unit during this time.
- The power supplies are built in units and must be installed in a cabinet or room (condensation free environment and indoor location) that is relatively free of conductive contaminants.
- The power supply is approved for the connection to 3-phase TN, TT and IT power grids (star networks) with a maximum phase-to-phase voltage of 500 Vac.

Force-GT DIN Rail Power Supply
24 V 480 W 3 Phase / DRF-24V480W3GBA

Functions

DC OK Relay Contacts and LED Indicator Characteristics

DC OK Relay Contacts Status	Characteristics
Contact closes	The output voltage > 90% of its steady state set value.
Contact opens	The output voltage < 90% of its steady state set value.

Operating Status	DC OK (Green LED)	DC OK Relay Contact
Normal Operation	ON	Closed
Overload (Hiccup Mode)	OFF	Open
Output Short Circuit	OFF	Open
Over Temperature	OFF	Open
No Input Power	OFF	Open

Force-GT DIN Rail Power Supply
24 V 480 W 3 Phase / DRF-24V480W3GBA

■ **Graph illustrating the Start-up Time, Rise Time, and Hold-up Time**

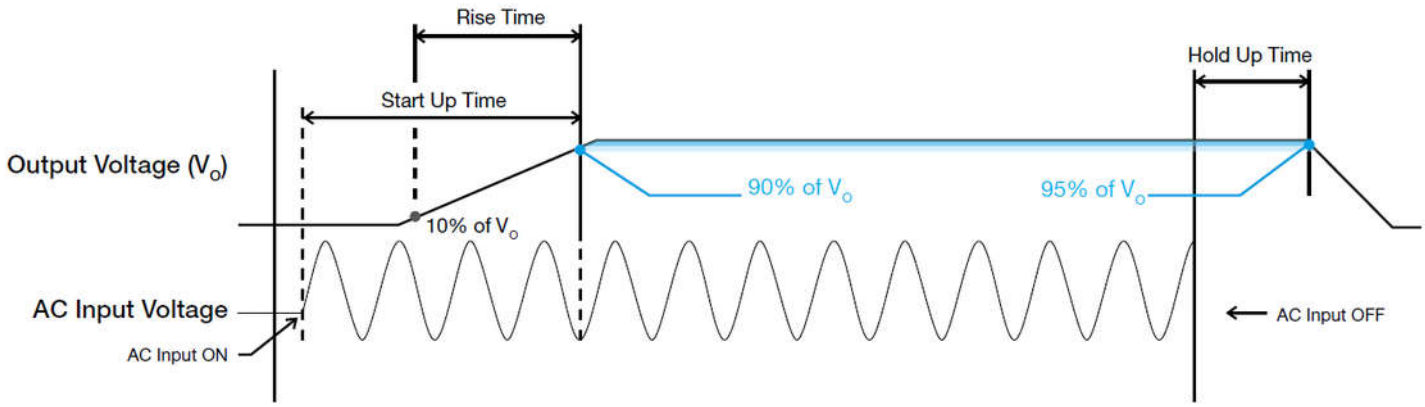

Start-up Time

The time required for the output voltage to reach 90% of its final steady state set value, after the input voltage is applied.

Rise Time

The time required for the output voltage to change from 10% to 90% of its final steady state set value.

Hold-up Time

Time between the collapse of the AC input voltage, and the output falling to 95% of its steady state set value.

Inrush Current

Inrush current is the peak, instantaneous, input current measured and, occurs when the input voltage is first applied. For AC input voltages, the maximum peak value of inrush current will occur during the first half cycle of the applied AC voltage. This peak value decreases exponentially during subsequent cycles of AC voltage.

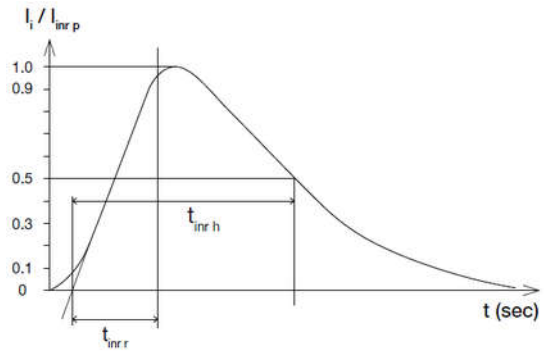

Dynamic Response

The power supply output voltage will remains within ±5% of its steady state value, when subjected to a dynamic load from 1.5% to 100% of its rated current.

■ **50% duty cycle / 5 Hz to 1 kHz**

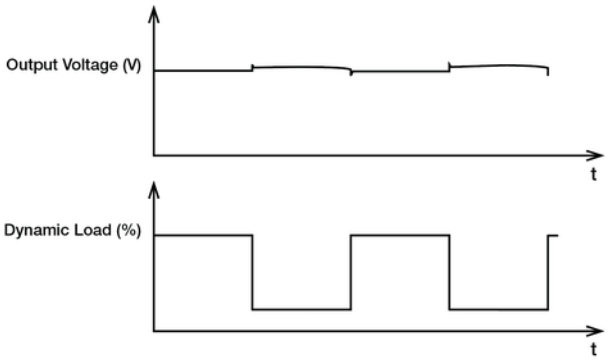

Force-GT DIN Rail Power Supply
24 V 480 W 3 Phase / DRF-24V480W3GBA

Overload & Overcurrent Protections (Auto-Recovery)

The power supply's Overload (OLP) and Overcurrent (OCP) Protections will be monitored by internal counter when output current (I_O) is 110~150% of maximum rated load (I_O Max). After counter reaches the limit value (typically 5 secs), output current will be limited to 110% typ. (refer to Ⓐ below) and output voltage (V_O) will start to droop. Once V_O is below approximately 18 Vdc typ., the power supply will start to operate in "Hiccup mode" as described in short circuit protection. The power supply will recover once the fault condition due to OLP or OCP is removed, then I_O is back within its specified limits.

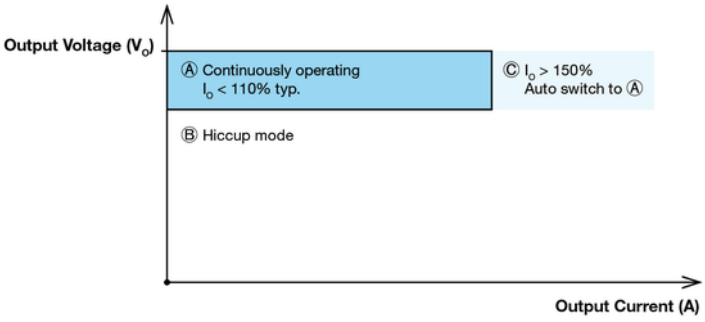

Short Circuit Protection (Auto-Recovery)

The power supply's output Short Circuit Protection function also provides protection against short circuits. When a short circuit is applied, the output current will operate in "Hiccup mode". The power supply will return to normal operation after the short circuit is removed.

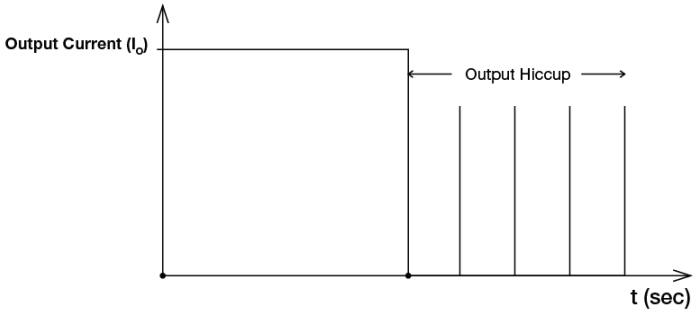

Overvoltage Protection (Auto-Recovery)

The power supply's overvoltage circuit will be activated when its internal feedback circuit fails. The output voltage shall not exceed its specifications defined on Page 4 under "Protections".

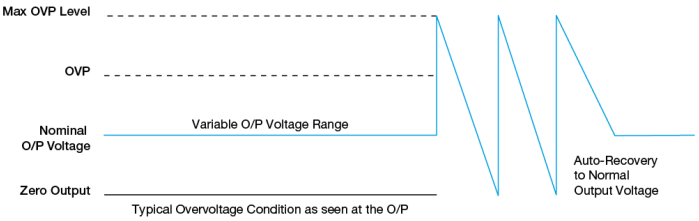

Over Temperature Protection (Auto-Recovery)

As described in load de-rating section, the power supply also has Over Temperature Protection (OTP). In the event of a higher operating temperature at 100% load, the power supply will run into OTP when the operating temperature is beyond what is recommended in the de-rating graph. When activated, the output voltage will go into bouncing mode until the temperature drops to its normal operating temperature as recommended in the de-rating graph.

External Input Protection Device

The unit is protected with internal fuse at L1, L2 and L3 pins, with an internal fuse that cannot be replaced. The power supply has been tested and approved on 20 A (UL) and 16 A (IEC) branch circuits without additional protection device. An external protection device is only required if the supplying branch has an ampacity greater than above. Thus, if an external protective device is necessary, or, utilized, please refer a minimum value in instruction sheet with 10 A B- or 4 A C- characteristic breaker.

Force-GT DIN Rail Power Supply
24 V 480 W 3 Phase / DRF-24V480W3GBA

Operating Mode

■ **AC Input Operation**

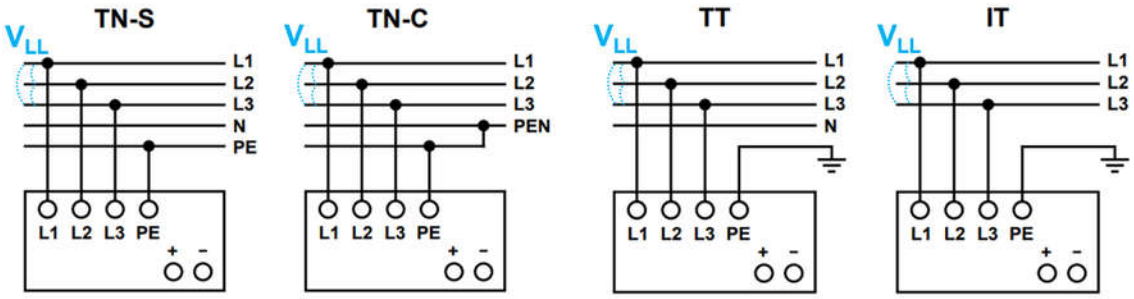

Fig. 4 AC Input Operation Connection Diagram

The power supply is approved for Star or Wye Networks L1, L2, L3 and PE connections. The nominal input voltage is 380-500 Vac phase to phase (V_{LL}), 380-500 Y 3-Phase or equivalent to 220-289 Vac phase to neutral (V_{LN}) voltage system, 220-289 V 3-Phase. The neutral does not connect with input terminal actually.

■ **DC Input Operation**

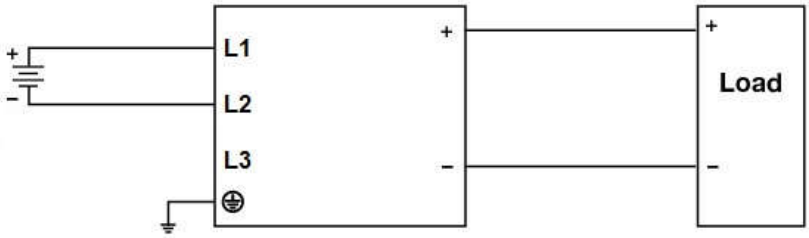

Fig. 5 DC Input Operation Connection Diagram

Step 1.
Use a battery or similar DC source.

Step 2.
Connect either connections of +pole and -pole to L1/L2/L3 as below.

- +pole to L1 and –pole to L2
- +pole to L1 and –pole to L3
- +pole to L2 and –pole to L1
- +pole to L2 and –pole to L3
- +pole to L3 and –pole to L1
- +pole to L3 and –pole to L2

Step 3.
Connect the PE terminal to an earth wire or to the machine ground.

Force-GT DIN Rail Power Supply
24 V 480 W 3 Phase / DRF-24V480W3GBA

Others

Attention

Delta provides all information in the datasheets on an “AS IS” basis and does not offer any kind of warranty through the information for using the product. In the event of any discrepancy between the information in the catalog and datasheets, the datasheets shall prevail (please refer to **www.DeltaPSU.com** for the latest datasheets information). Delta shall have no liability of indemnification for any claim or action arising from any error for the provided information in the datasheets. Customer shall take its responsibility for evaluation of using the product before placing an order with Delta.

Delta reserves the right to make changes to the information described in the datasheets without notice.

Manufacturer and Authorized Representatives Information

Manufacturer

Thailand
Delta Electronics (Thailand) PCL.
909 Pattana 1 Rd., Muang, Samutprakarn, 10280 Thailand

Taiwan
Delta Electronics, Inc.
3 Tungyuan Road, Chungli Industrial Zone, Taoyuan County 32063, Taiwan

Authorized Representatives

The Netherlands
Delta Greentech (Netherlands) B.V.
Zandsteen 15, 2132 MZ Hoofddorp, The Netherlands

United Kingdom
Delta Electronics Europe Limited
1 Redwood Court, Peel Park Campus,
East Kilbride, Glasgow, G74 5PF, United Kingdom