E30438

O-ring

O-RG 26,00X 3,00/EPDM/70/SW

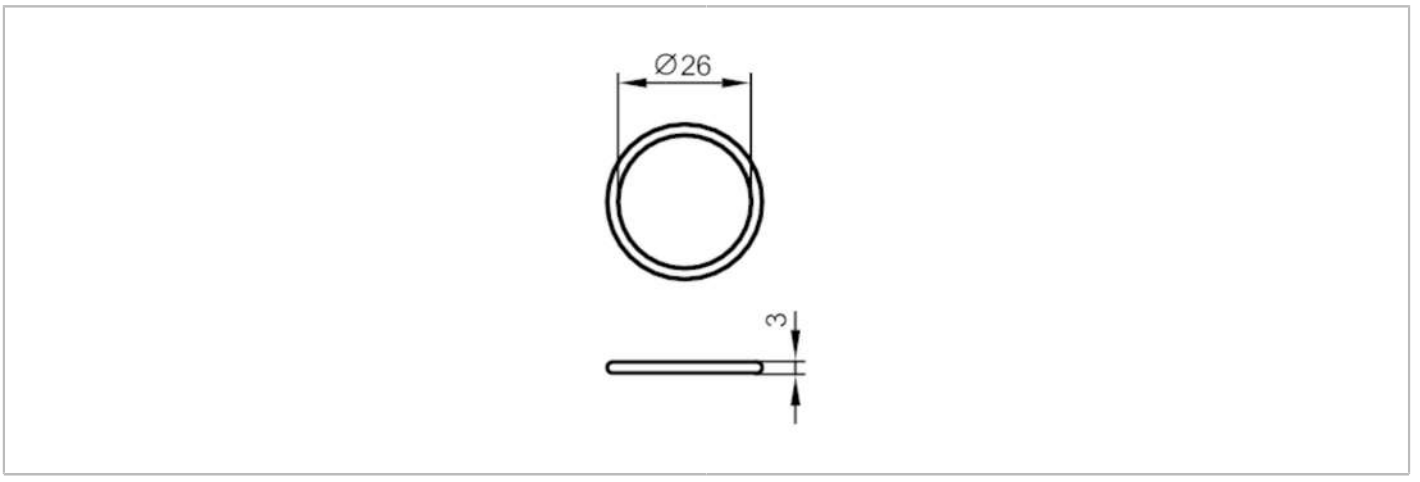

EC 1935/2004 FDA

Mechanical data		
Weight	[g]	1.9
Inside diameter	[mm]	26
External diameter	[mm]	32
Materials		EPDM
Remarks		
Pack quantity		1 pcs.