# Product Data Sheet

**9290904200**
VWC0025AUBAS
255 N

ebmpapst
The engineer's choice



GREEN TECH

**255 N**

**INDEX**

**1 General ..... 3**
**2 Mechanics ..... 3**
2.1 General ..... 3
2.2 Connections ..... 3
**3 Operating Data ..... 4**
3.1 Electrical Operating Data ..... 4
3.2 Electrical Features ..... 5
3.3 Aerodynamics ..... 6
3.4 Sound Data ..... 7
**4 Environment ..... 7**
4.1 General ..... 7
4.2 Climatic Requirements ..... 7
**5 Safety ..... 8**
5.1 Electrical Safety ..... 8
5.2 Approval Tests ..... 8
**6 Reliability ..... 8**
6.1 General ..... 8

## 1 General

| | | |
|---|---|---|
| Fan type | Fan | |
| Rotating direction looking at rotor | Counterclockwise | |
| Airflow direction | Air outlet over struts | |
| Bearing system | Sleeve bearing | |
| Mounting position - shaft | Any | |

## 2 Mechanics

### 2.1 General

| | | |
|---|---|---|
| Width | 25,0 mm | |
| Height | 25,0 mm | |
| Depth | 8,0 mm | |
| Mass | 0,005 kg | |
| Housing material | Plastic | |
| Impeller material | Plastic | |
| Max. torque when mounted across both mounting flanges<br>Screw size | <br>Remaining corners: 20 Ncm<br>ISO 4762 - M2,5 degreased, without an additional brace and without washer | |

### 2.2 Connections

| | | |
|---|---|---|
| Electrical connection | Wires | |
| Lead wire length<br>Tolerance | L = 160 mm<br>+- 3,0 mm | |

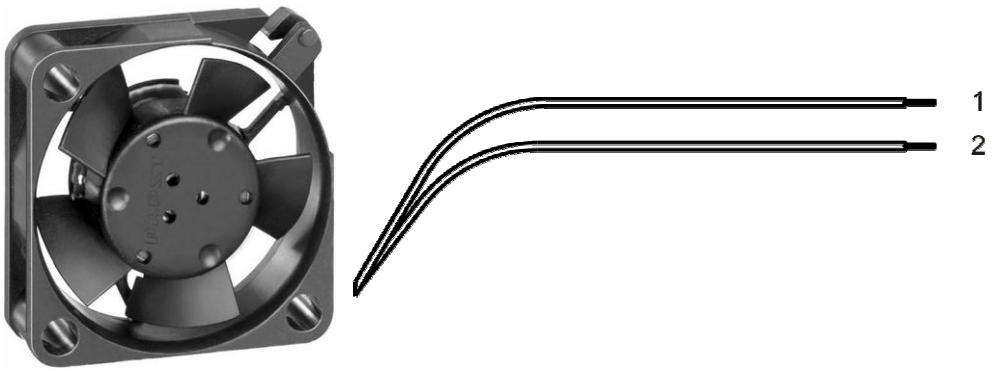


| Wire | Color | Operation | Wire size | Insulation diameter |
|---|---|---|---|---|
| 1 | red | + UB | AWG 28 | 0,90 mm |
| 2 | blue | - GND | AWG 28 | 0,90 mm |

## 3 Operating Data

### 3.1 Electrical Operating Data

Measurement conditions: Normal air density = 1,2 kg/m3; Temperature 23℃ +/ - 3℃; Motor axis horizontal; warm-up time before measuring 5 minutes (unless otherwise specified). In the intake and outlet area should not be any solid obstruction within 0,5 m.

Δp = 0: corresp. to free air flow (see chapter aerodynamics)
I: corresp. to arithm. mean current value

| Features | Condition | Symbol | Values | | |
|---|---|---|---|---|---|
| Voltage range | | U | 4,5 V | | 5,5 V |
| Nominal voltage | | $U_N$ | | 5 V | |
| Power consumption<br>Tolerance | Δp = 0<br>0010 | P | 0,3 W<br>+- 17,5 % | 0,4 W<br>+- 12,5 % | 0,45 W<br>+- 15 % |
| Current consumption<br>Tolerance | Δp = 0<br>0010 | I | 70 mA<br>+- 17,5 % | 80 mA<br>+- 12,5 % | 80 mA<br>+- 15 % |
| Speed<br>Tolerance | Δp = 0<br>0010 | n | 8.500 1/min<br>+- 12,5 % | 9.600 1/min<br>+- 10 % | 10.700 1/min<br>+- 10 % |
| Starting current consumption | | | | 130 mA | |

### 3.2 Electrical Features

| | | |
|---|---|---|
| Electronic function | None | |
| Reversed polarity protection<br>Max. residual current at $U_N$ | Impedance<br>$I_F$ <= 5 mA | |
| Locked rotor protection | Impedance protected | |
| Locked rotor current at $U_N$ | $I_{block}$ approx. 130 mA | |

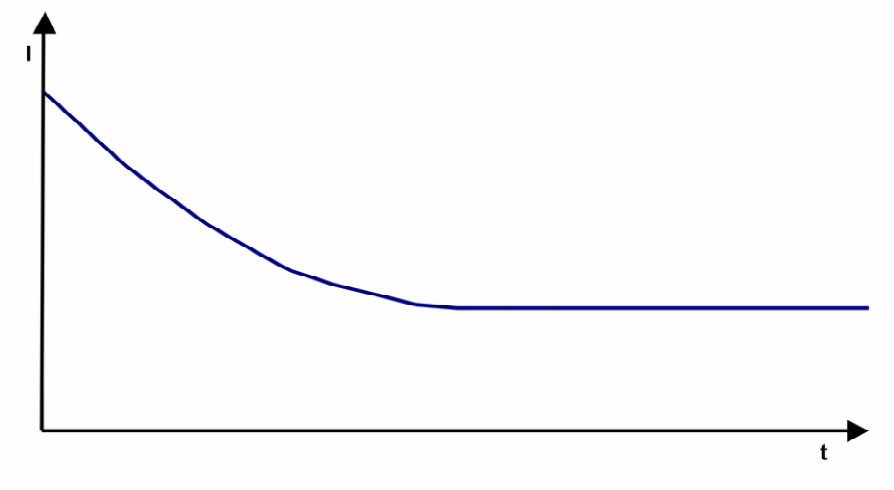

### 3.3 Aerodynamics

| | |
|---|---|
| Measurement conditions: | Measured with a double chamber intake rig.<br>Normal air density = 1,2 kg/m3; Temperature 23℃ +/ - 3℃;<br>In the intake and outlet area should not be any solid obstruction within 0,5 m. Motor shaft horizontal.<br>The information is only valid under the specified test conditions and may be changed by the installation conditions. If there are deviations from the standard test conditions, the characteristic values must be checked under the installed conditions. |

a.) Operation condition:

| |
|---|
| 9.600 1/min at free air flow |

| | | |
|---|---|---|
| Max. free-air flow (Δp = 0 / V̇ = max.) | 3,5 m3/h | |
| Max. static pressure (Δp = max. / V̇ =0) | 29 Pa | |

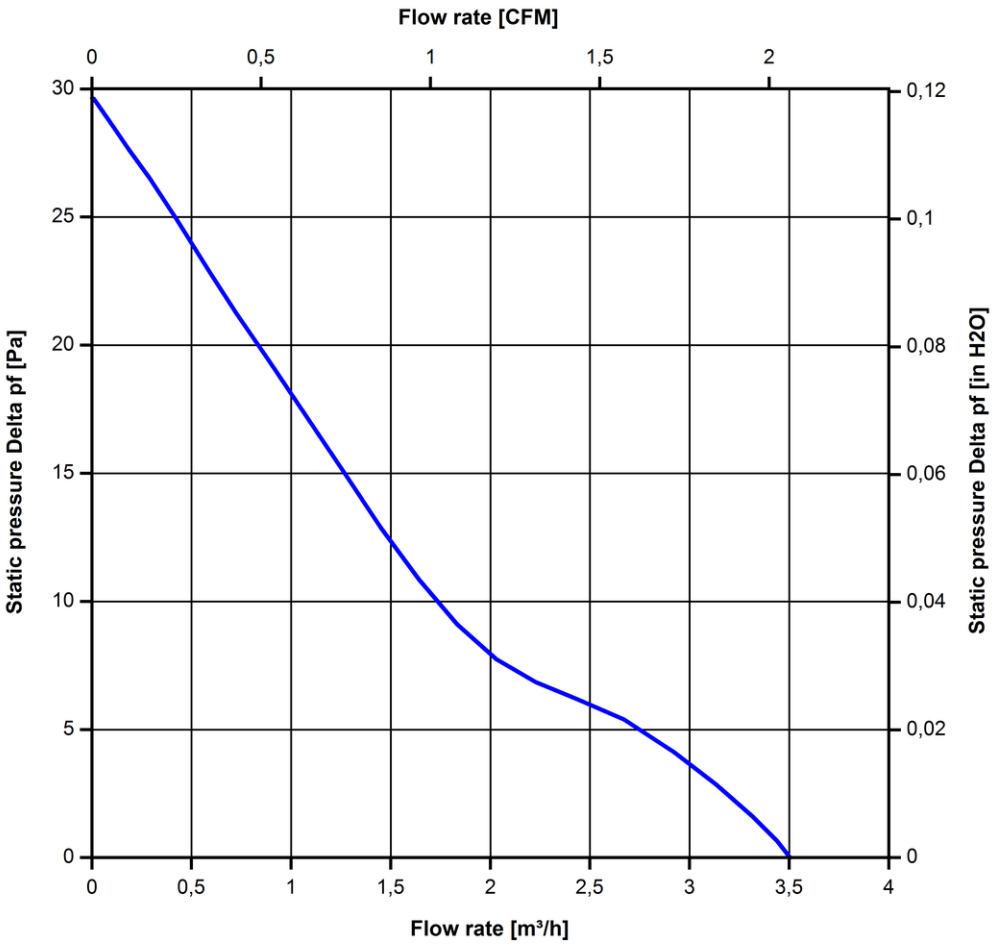

### 3.4 Sound Data

| | |
|---|---|
| Measurement conditions: | Sound pressure level: 1 meter distance between microphone and the air intake.<br>Sound power level: Acc. to DIN 45635 part 38 (ISO 10302)<br>Measured in a semianchoic chamber with a background noise level of Lp(A) < 5 dB(A)<br>For further measurement conditions see chapter aerodynamics. |

a.) Operation condition:

| |
|---|
| 9.600 1/min at free air flow |

| | | |
|---|---|---|
| Optimal operating point | 3,5 m3/h @ 0 Pa | |
| Sound power level at the optimal operating point | 3,0 bel(A) | |
| Sound pressure level at free air flow, measured in rubber bands | 18,0 dB(A) | |

## 4 Environment

### 4.1 General

| | | |
|---|---|---|
| Min. permitted ambient temperature TU min. | -10 °C | |
| Max. permitted ambient temperature TU max. | 70 °C | |
| Min. permitted storage temperature TL min. | -40 °C | |
| Max. permitted storage temperature TL max. | 80 °C | |

### 4.2 Climatic Requirements

| | | |
|---|---|---|
| Humidity requirements | humid heat, constant; according to DIN EN 60068-2-78, 14 days | |
| Water exposure | None | |
| Dust requirements | None | |
| Salt fog requirements | None | |

Permitted application area:
The product is intended for use in sheltered rooms with controlled temperature and controlled humidity. Directly exposure to water must be avoided.

Pollution degree 1 (according DIN EN 60664-1)
There is either no pollution or it occurs only dry, non-conductive pollution. The pollution has no negative impact.

Please require severity levels and specification parameters from the responsible development departments.

## 5 Safety

### 5.1 Electrical Safety

| | | |
|---|---|---|
| Dielectric strength<br>DIN EN 60950 (VDE 0805) and DIN EN 60335 (VDE 0700)<br>A.) Type test<br>Measuring conditions: After 48h of storage at 95% R.H. and 25℃.<br>No arcing or breakdown is allowed!<br>All connections together to ground.<br>B.) Routine test<br>Measuring conditions: At indoor climate.<br>No arcing or breakdown is allowed!<br>All connections together to ground. | Not applicable<br><br>Not applicable | |
| Isolation resistance<br>Measuring conditions: After 48h of storage at 95% R.H. and 25℃ measured with U=500 VDC for 1 min. | RI > 10 MOhm | |
| Clearance / creepage distance | 1,0 mm / 1,2 mm | |
| Protection class | III | |

### 5.2 Approval Tests

| | | |
|---|---|---|
| CE | EC Declaration of Conformity | Yes |
| EAC | Eurasian Conformity | Yes |
| UL | Underwriters Laboratories | Yes / UL507, Electric Fans E38324 |
| VDE | Association for Electrical, Electronic and Information Technologies | Yes / Approval acc. to EN 60950 (VDE 0805) - Information technology equipment |
| CSA | Canadian Standards Association | Yes / C22.2 No. 113 Fans and Ventilators |
| CCC | China Compulsory Certification | Not applicable |

## 6 Reliability

### 6.1 General

| | | |
|---|---|---|
| Life expectancy L10 at TU = 20 ℃ | 40.000 h | |
| Life expectancy L10 at TU = 40 ℃ | 22.500 h | |
| Life expectancy L10 at TU = 60 ℃ | 12.000 h | |
| Life expectancy L10 at TU max. | 9.000 h | |
| Life expectancy L10 acc. to IPC 9591 at TU = 40 ℃ | 37.5 00 h | |

Copying of this document, and giving it to others and the use or communication of the contents thereof, are forbidden without express authority. Offenders are liable to the payment of damages. All rights are reserved in the event of the grant of a patent or the registration of a utility model or design.

Schutzvermerk nach DIN ISO 16016 beachten/
Refer to protection notice DIN ISO 16016!

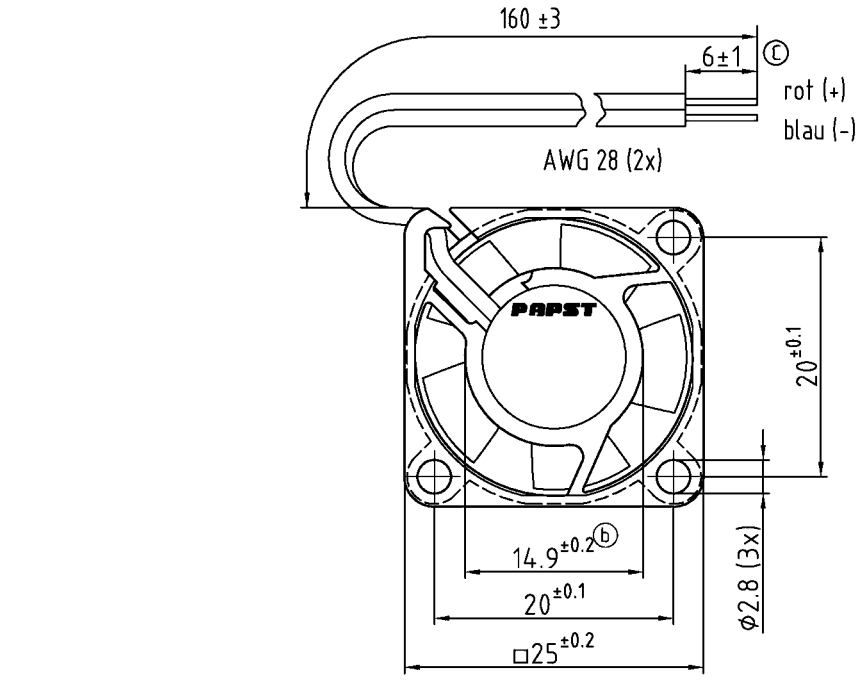


M 1:1

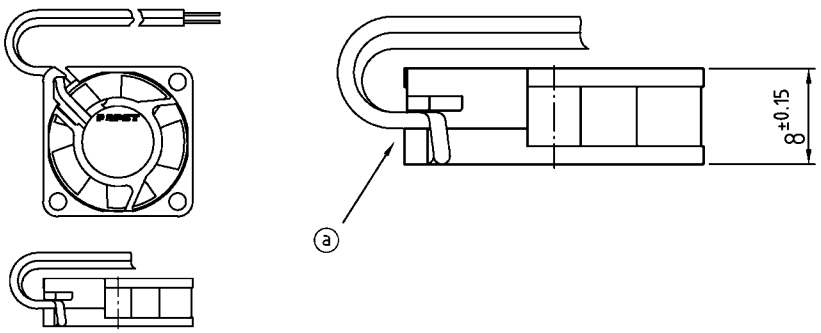


| | | |
|---|---|---|
| Tolerierung/Tolerances: DIN 7167<br>Allgemeintoleranzen/<br>Gen. tolerances: | | |
| | Artikel/Title | Massstab/scale |
| Datum/Date: Name/Name<br>Bearb./Drawn: | | |
| ebmpapst | Zchg.-Nr./<br>Dwg.-No.: | Blatt/Page |
| Index/Index: Aend.-Nr./Change-No.<br>gepr. u. zur Verwendung freigegeben/Checked for release<br>von by am on | ebm-papst St. Georgen GmbH & Co. KG | Ers.f.Zchg./<br>Replaces: A4 |

12/03