ABB MEASUREMENT & ANALYTICS | USER GUIDE – STANDARD FUNCTIONALITY | IM/CM/S-EN REV. U

ControlMaster CM10, CM30 and CM50

Universal process controllers, ⅛, ¼ and ½ DIN



Measurement made easy

For more information

Further publications for the ControlMaster indicators are available for free download from:
www.abb.com/measurement

or by scanning this code:

	Search for or click on
Data Sheet ControlMaster CM10 Universal process controller, ⅛ DIN	DS/CM10-EN
Data Sheet ControlMaster CM30 Universal process controller, ¼ DIN	DS/CM30-EN
Data Sheet ControlMaster CM50 Universal process controller, ½ DIN	DS/CM50-EN
Communications Supplement ControlMaster CM10, CM15, CM30, CM50, CMF160 and CMF310 Universal process controllers and indicator, ⅛, ¼, ½ DIN and fieldmount	IM/CM/C-EN

Refer to Section 6, page 27

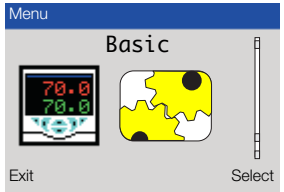

- Loop 1 Setpoints
  - Local Setpoint 1 (4)
  - RSP Ratio
  - RSP Bias
  - Ramp Mode
  - Ramp Rate
- Loop 1 Control
  - On/Off Hysteresis
  - Mode
  - Autotune
  - PID
- Loop 1 Mot Valve
  - Ratio
  - Bias
  - Deadband
  - Travel Time
- Loop 1 Time Prop
  - Cycle Time 1
  - Cycle Time 2
- Alarm 1 (8)
  - Trip

Refer to Section 7.1, page 36

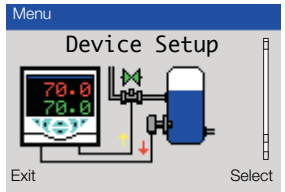

- Initial Setup
  - App. Template
  - Loop 1 Output Type
  - Loop 1 Split O/P
  - Instrument Tag
  - Mains Freq.
  - Config Action
  - Custom Template
  - Reset to Defaults
- Security Setup
  - Basic Password
  - Advanced Password
  - Reset Passwords
- Custom Config

Refer to Section 7.2, page 39

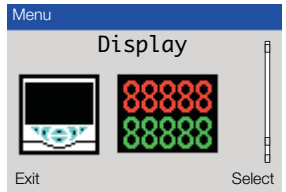

- Language
- Operator Templates
  - Page 1 (4) Template
- Operator Functions
  - Autoscroll
  - Soft Key Function
  - Auto Manual Enable
  - Local Remote Enable
  - Alarm Ack. Enable
  - SP Adjust Enable
- Settings
  - Brightness
  - Contrast*
- Date & Time
  - Date Format
  - Time & Date
  - Daylight Saving
  - SP Adjust Enable

Refer to Section 7.3, page 43

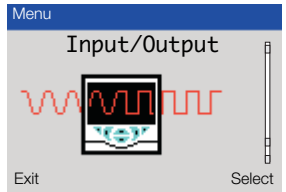

- Analog Inputs
  - Anlg Input 1 (4)
- Analog Outputs
  - Analog Output 1 (2)
- Digital I/O
  - Digital IO 1 (6)
- Relays
  - Relay 1 (4)

Refer to Section 7.4, page 51

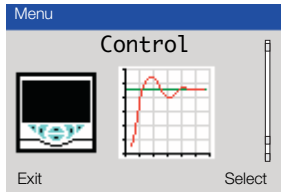

See Back Cover

- Loop 1 Setpoints
  - Low Limit
  - High Limit
  - No. of Local SP's
  - Local Setpoint 1
  - Track Mode
  - RSP Ratio
  - RSP Bias
  - RSP Fault Action
  - Default Setpoint
  - Ramp Mode
  - Ramp Rate
  - Select Sources
- Loop 1 Control
  - Control Type
  - Control Action
  - On/Off Hysteresis
  - Autotune
  - PID
- Loop 1 Output
  - Limits
  - Failure Actions
  - A/M Select Sources
  - Slew Rate
  - Tracking
- Loop 1 Split O/P
  - Min Input 1
  - Min OP 1
  - Max Input 1
  - Max OP 1
  - Min Input 2
  - Min OP 2
  - Max Input 2
  - Max OP 2
- Loop 1 Time Prop
  - Cycle Time 1
  - Cycle Time 2

Note. When in Advanced Level (configuration) mode, press and hold the ↰ key to return to the standard Operator page – see Fig. 3.1, page 5

*Enabled for CM30 and CM50 only

Contents

1 Safety 3
1.1 Electrical Safety 3
1.2 Symbols 3
1.3 Health & Safety 4

2 Introduction 4
2.1 EC Directive 89 / 336 / EEC 4
2.2 End of Life Disposal 4

3 Displays, Icons and Keys 5
3.1 CM10 Operator Page, Icons and Keys 5
3.2 CM30 and CM50 Operator Page, Icons & Keys 6

4 Installation 8
4.1 Siting and Environmental Requirements 8
4.2 Dimensions 9
4.3 Mounting 11
4.4 Jumper Links for Relay Outputs 12
4.4.1 Removing the Controller from its Case 12
4.4.2 Resetting Jumper Links 13
4.5 Electrical Connections 14
4.5.1 CM10 Electrical Connections 15
4.5.2 CM30 Electrical Connections 16
4.5.3 CM50 Electrical Connections 17
4.5.4 Analog Inputs 18
4.5.5 Frequency / Pulse Input 20
4.5.6 Digital Input / Output 20

5 Operator Level Menus 22
5.1 Diagnostic Status Bar 24
5.2 Diagnostic View 25
5.3 Security Options 25
5.4 Access Level 26

6 Basic Level 27

7 Advanced Level 36
7.1 Device Setup 36
7.2 Display 39
7.3 Input/Output 43
7.4 Control 51
7.5 Process Alarm 63
7.6 Profile 66
7.6.1 Ramp Types 67
7.6.2 Guaranteed Ramp / Soak 68
7.6.3 Set Point Start Condition – Current PV 70
7.6.4 Profile Parameters 71
7.7 Functions 80
7.8 Communication 93
7.9 Diagnostics 94
7.9.1 Diagnostic Messages 96
7.10 Device Info 100

8 Templates and Functionality 101
8.1 Basic Templates 101
8.1.1 Single Loop / Single Loop with Remote Setpoint 101
8.2 Standard Templates 103
8.2.1 Auto / Manual Station (Low Signal Selection / Digital Signal Selection) 103
8.2.2 Analog Backup Station (Low Signal Selection / Digital Signal Selection) 104
8.2.3 Single Indicator 106
8.2.4 Dual Indicator 106

9 PC Configuration 107

10 Specification 108

Appendix A – Digital and Analog Sources 116
A.1 Digital Sources 116
A.2 Analog Sources 117

Appendix B – Error Codes 118
B.1 Configuration Error Codes 118
B.2 Profile Error Codes 121

Appendix C – Analog Input (Engineering) Units 122

Appendix D – Output Type Assignments 124

1 Safety

Information in this manual is intended only to assist our customers in the efficient operation of our equipment. Use of this manual for any other purpose is specifically prohibited and its contents are not to be reproduced in full or part without prior approval of the Technical Publications Department.

1.1 Electrical Safety

This equipment complies with the requirements of CEI / IEC 61010-1:2010 3rd edition 'Safety Requirements for Electrical Equipment for Measurement, Control and Laboratory Use' and complies with US NEC 500, NIST and OSHA.

If the equipment is used in a manner NOT specified by the Company, the protection provided by the equipment may be impaired.

1.2 Symbols

One or more of the following symbols may appear on the equipment labelling:

	**Warning** – Refer to the manual for instructions
	**Caution** – Risk of electric shock
	Functional earth (ground) terminal
	Protective earth (ground) terminal
	Direct current supply only
	Alternating current supply only
	Both direct and alternating current supply
	The equipment is protected through double insulation

1.3 Health & Safety

Health and Safety
To ensure that our products are safe and without risk to health, the following points must be noted:

- The relevant sections of these instructions must be read carefully before proceeding.
- Warning labels on containers and packages must be observed.
- Installation, operation, maintenance and servicing must be carried out only by suitably trained personnel and in accordance with the information given.
- Normal safety precautions must be taken to avoid the possibility of an accident occurring when operating in conditions of high pressure and / or temperature.

Safety advice concerning the use of the equipment described in this manual or any relevant hazard data sheets (where applicable) may be obtained from the Company, together with servicing and spares information.

2 Introduction

This manual provides details for the ControlMaster CM10 (1/8 DIN), CM30 (1/4 DIN) and CM50 (1/4 DIN) controllers with Standard functionality.

Note.

- Read all relevant sections of this guide before configuring the system or modifying system parameters.
- Install and use associated equipment in accordance with the relevant national and local standards.
- System configuration must be carried out only by users or personnel with approved access rights (user privileges).

2.1 EC Directive 89 / 336 / EEC

In order to meet the requirements of the EC Directive 89/336/EEC for EMC regulations, this product must not be used in a non-industrial environment.

2.2 End of Life Disposal

Controllers with Standard functionality contain a small lithium battery that must be removed and disposed of responsibly in accordance with local environmental regulations.

3 Displays, Icons and Keys

3.1 CM10 Operator Page, Icons and Keys

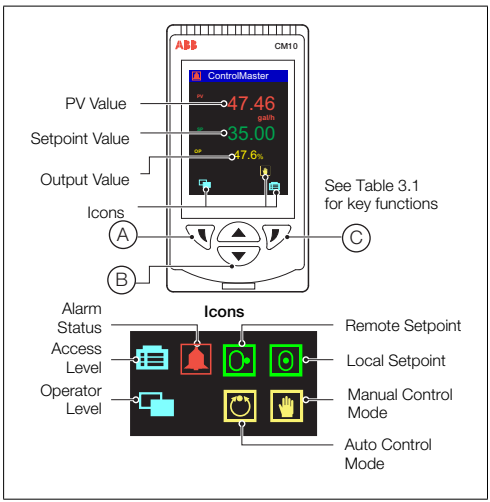

Fig. 3.1 ControlMaster CM10 Display and Icons

Ⓐ	Navigation (left) / *Operator Level* access key – see page 22.
Ⓑ	Up / Down keys – navigate up / down menus and increase / decrease displayed values.
Ⓒ	Navigation key (right) / programmable *Soft Key* – see page 40.

Table 3.1 CM10 Front Panel Key Functions

Note. When a *Soft Key* option is assigned to key Ⓒ, the *Advanced Level* (see page 36) must be accessed using the *Operator Level* access key Ⓐ.

3.2 CM30 and CM50 Operator Page, Icons & Keys

The ControlMaster CM30 and CM50 displays and icons are shown in Fig. 3.2.

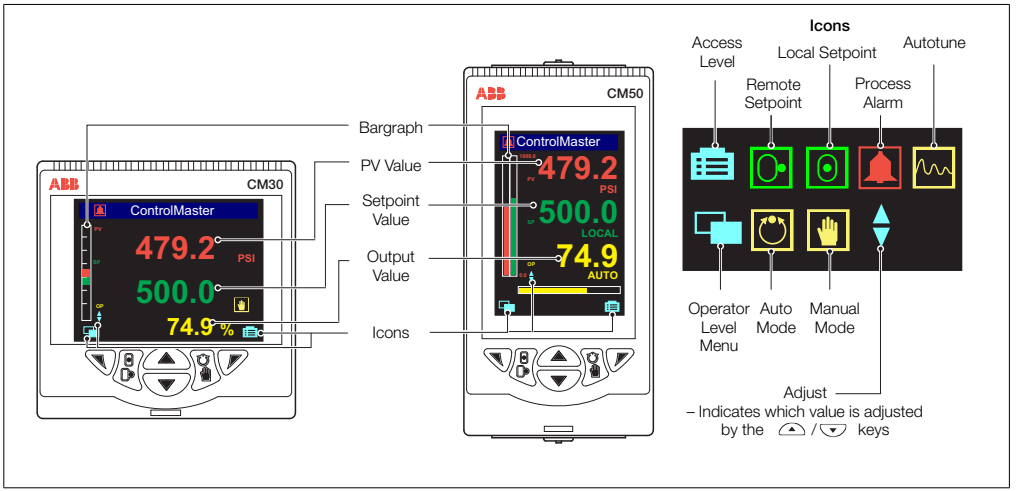

Fig. 3.2 ControlMaster CM30 and CM50 Displays and Icons

The ControlMaster CM30 and CM50 front panel keys are shown in Fig. 3.3.

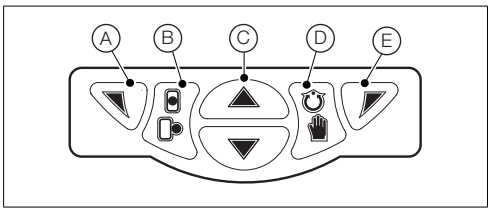

Fig. 3.3 ControlMaster CM30 / CM50 Front Panel Keys

(A)	Navigation (left) / *Operator Level* access key – see page 22.
(B)	Local / Remote setpoint mode selection key.
(C)	Up / Down keys – navigate up / down menus and increase / decrease displayed values.
(D)	Auto/Manual control mode selection key.
(E)	Navigation key (right) / programmable *Soft Key* – see page *40*.

Table 3.2 CM30 / CM50 Front Panel Key Functions

Note. When a *Soft Key* option is assigned to key (E), the *Advanced Level* (see page 36) must be accessed using the *Operator Level* access key (A).

4 Installation

4.1 Siting and Environmental Requirements

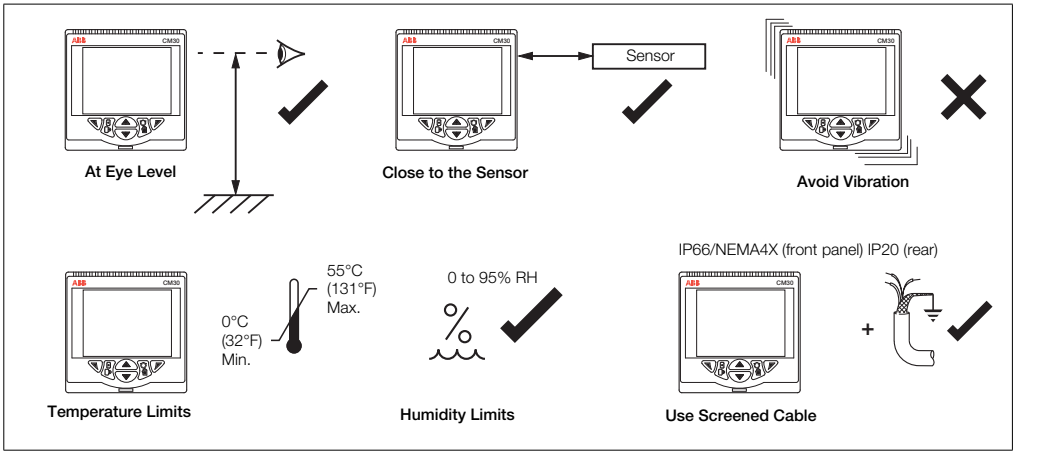

Fig. 4.1 Siting and Environmental Requirements

4.2 Dimensions

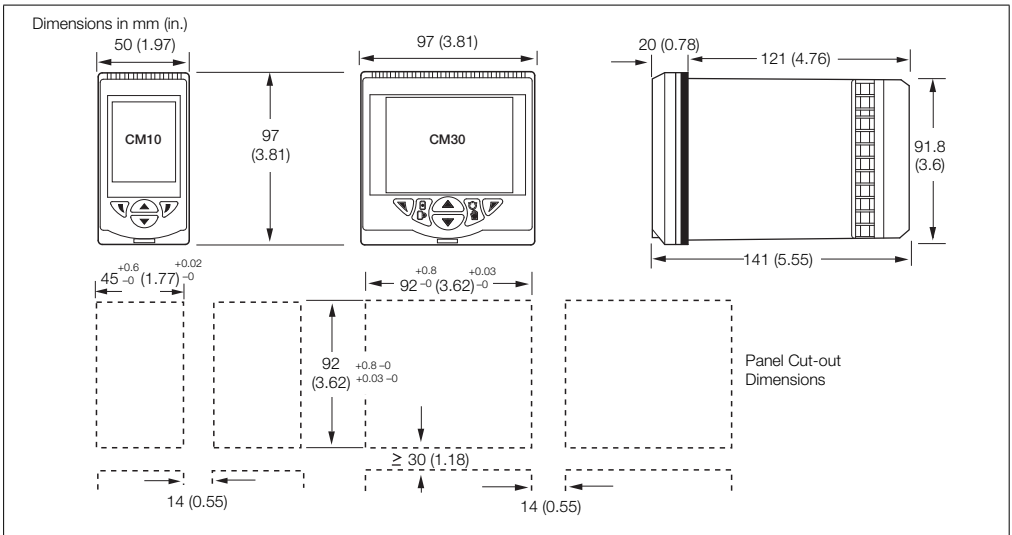

Fig. 4.2 ControlMaster CM10 and CM30 Dimensions

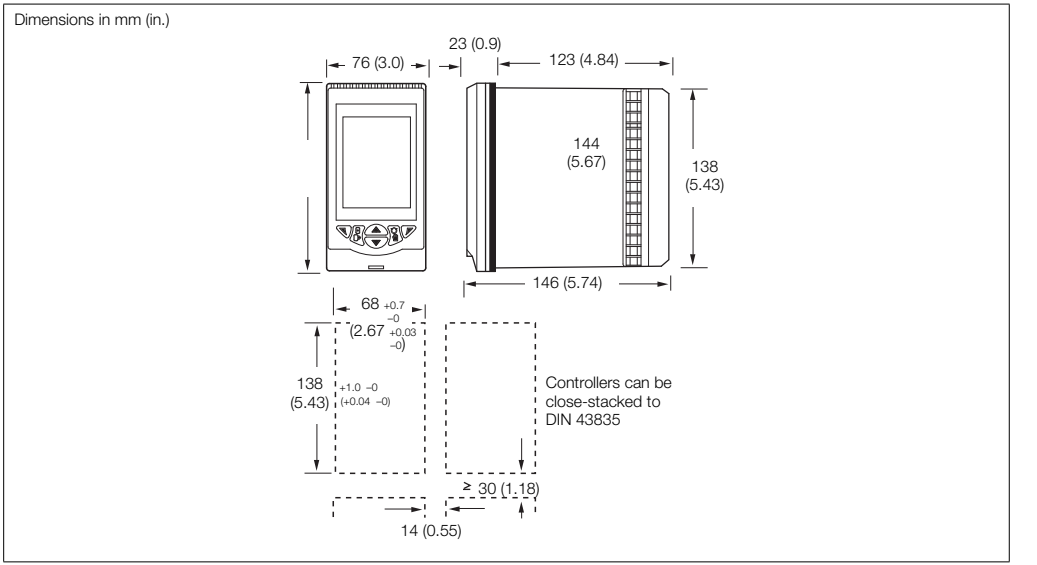

Fig. 4.3 ControlMaster CM50 Dimensions

4.3 Mounting

ControlMaster is designed for panel mounting. For NEMA4X protection, a panel thickness of 2.5 mm (0.1 in.) is required.

To panel-mount the controller:

1. Cut a hole of the correct size for the controller in the panel – see Section 4.2, page 9 for dimensions.
2. Insert the controller into the panel cut-out.

Referring to Fig. 4.4:

3. Position the upper panel clamp (A) at the top front of the case against the panel.
4. Locate the panel clamp anchor (B) in slot (C).
5. Tighten the panel clamp anchor screw (D) until panel clamp (A) is secured against the panel.

> **Caution.** Do not overtighten the screw.

6. Repeat steps 3 to 5 to fit the lower panel clamp (E) and panel clamp anchor (F).

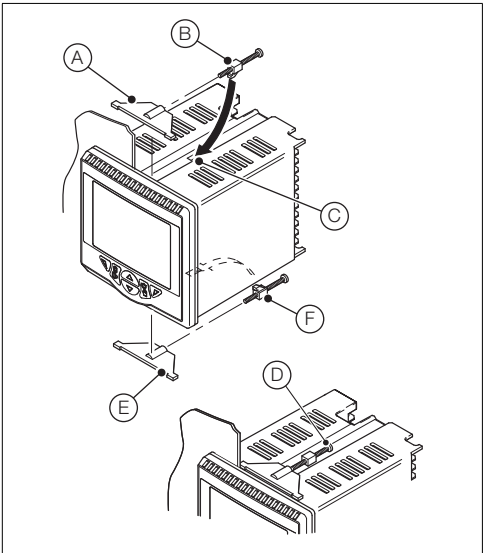

Fig. 4.4 Mounting Details

4.4 Jumper Links for Relay Outputs

The factory-set default for relay action is N/O.

4.4.1 Removing the Controller from its Case

The ControlMaster inner assembly must be removed from its case to access the relay contact jumper links.

Referring to Fig. 4.5:

1. Insert the bezel release tool (A) (supplied) into the front panel slot (B) below the function keys.
2. Press the bezel release tool (A) fully in and then down (C) until the shoulder on the tool engages with the notch behind the controller front plate.
3. Pull the bezel release tool (A) to withdraw the inner assembly from the case (D).

Note. If the bezel release tool is mislaid, 2 small flat-headed screwdrivers (4 mm [0.15 in.]) can be used as alternative tools, one inserted into the front panel slot and the second for leverage in the notch on the underside of the controller front plate. The notch is the only area that can be used as a leverage point – do not attempt to lever the front panel from any other area.

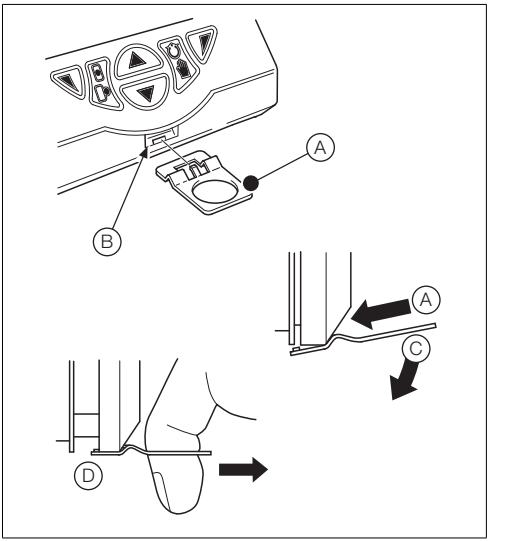

Fig. 4.5 Removing the Controller from the Case

4.4.2 Resetting Jumper Links

Note. The factory-set default for all jumper links is N/O.

1. The links associated with the relay outputs are shown in Fig. 4.6.
2. If necessary, move the link to select the relay action required (N/O or N/C).

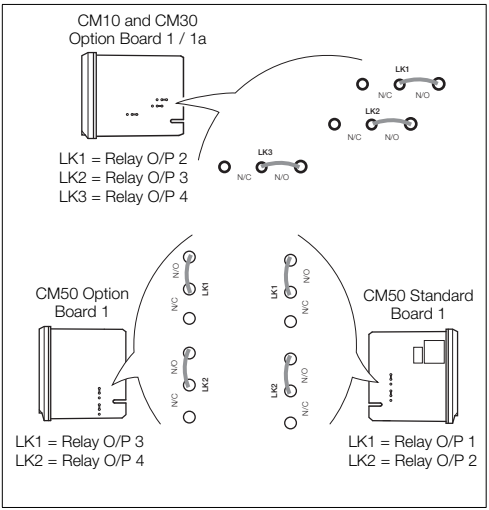

Fig. 4.6 Jumper Links for Relay Outputs

4.5 Electrical Connections

Warning.

- The controller is not fitted with a switch therefore a disconnecting device such as a switch or circuit breaker conforming to local safety standards must be fitted to the final installation.
- It must be mounted in close proximity to the controller within easy reach of the operator and must be marked clearly as the disconnection device for the instrument.
- Remove all power from supply, relay and any powered control circuits and high common mode voltages before accessing or making any connections.
- Use cable appropriate for the load currents. The terminals accept cables from 18 to 14 AWG (0.8 to 2.5mm^2).
- Always route signal leads and power cables separately, preferably in earthed (grounded) metal conduit.
- It is strongly recommended that screened cable is used for signal inputs and relay connections.
- The instrument conforms to Mains Power Input Overvoltage Category 2, Pollution Degree 2 (EN601010–1).
  (This equipment is protected through double insulation – Insulation Class II.)
- Analog / digital inputs and outputs, transmitter power supply and DC power supply are SELV (Safety Extra Low Voltage) circuits.
- All connections to secondary circuits must have basic insulation.
- After installation, there must be no access to live parts, e.g. terminals.
- Terminals for external circuits are for use only with equipment with no accessible live parts.
- If the controller is used in a manner not specified by the Company, the protection provided by the equipment may be impaired.
- All equipment connected to the controller's terminals must comply with local safety standards (IEC 60950, EN601010–1).

Note. Terminal screws must be tightened to a torque of 0.1 Nm (0.9 lbf/in.).

4.5.1 CM10 Electrical Connections

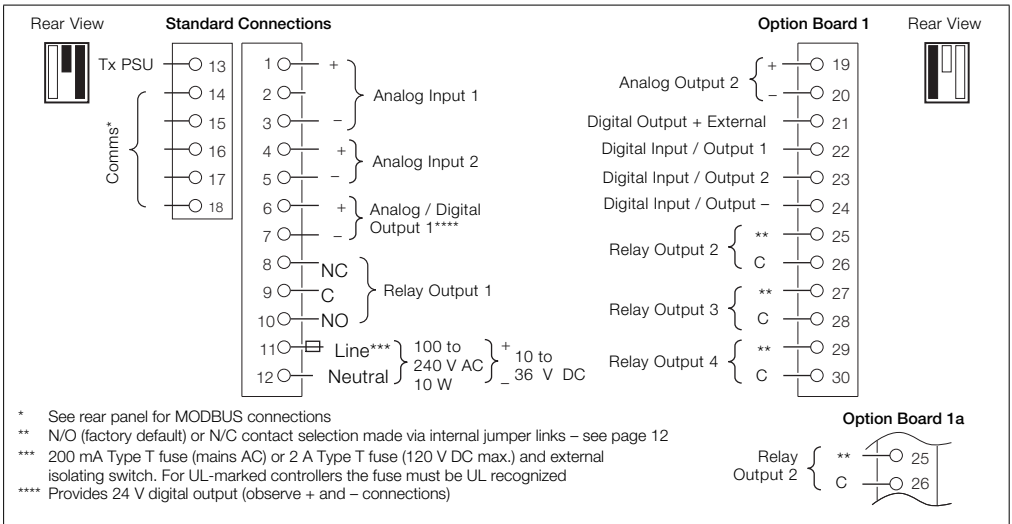

Fig. 4.7 ControlMaster CM10 Electrical Connections

4.5.2 CM30 Electrical Connections

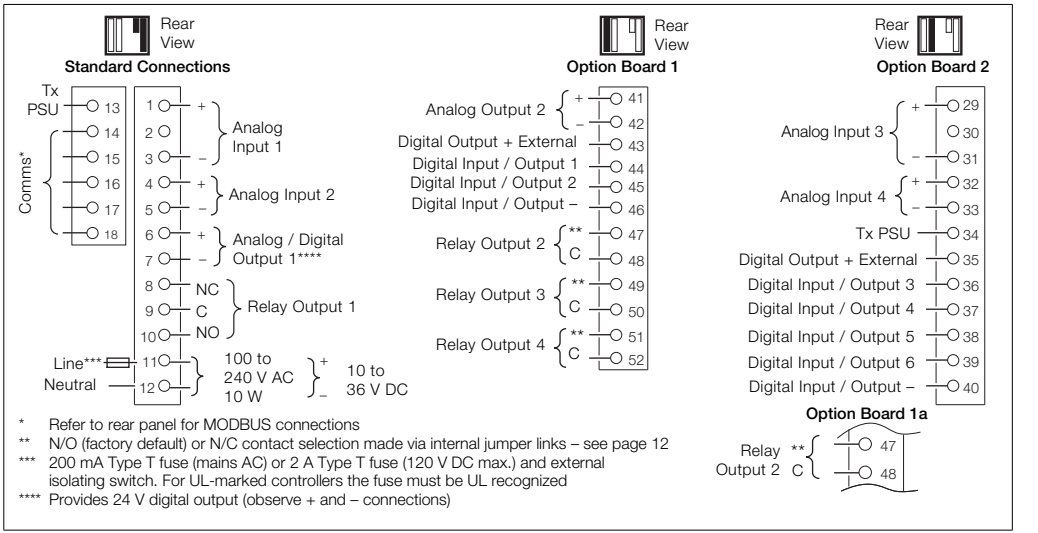

* Refer to rear panel for MODBUS connections
** N/O (factory default) or N/C contact selection made via internal jumper links – see page 12
*** 200 mA Type T fuse (mains AC) or 2 A Type T fuse (120 V DC max.) and external isolating switch. For UL-marked controllers the fuse must be UL recognized
**** Provides 24 V digital output (observe + and – connections)

Fig. 4.8 ControlMaster CM30 Electrical Connections

4.5.3 CM50 Electrical Connections

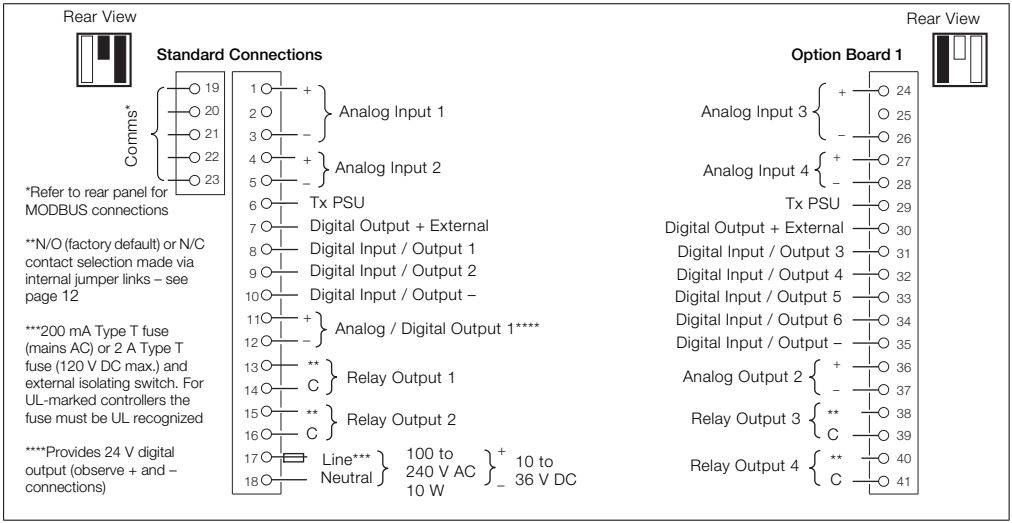

Fig. 4.9 ControlMaster CM50 Electrical Connections

4.5.4 Analog Inputs

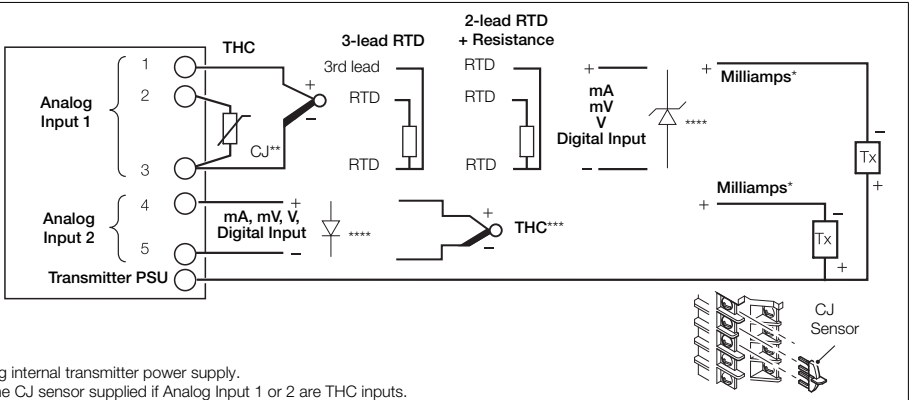

* Using internal transmitter power supply.

** Fit the CJ sensor supplied if Analog Input 1 or 2 are THC inputs.
(Alternatively, it is possible to use an external fixed cold [reference] junction, if the controller is programmed for use with millivolt inputs and the appropriate thermocouple linearizer is selected.)

*** Analog Input 2 can be used only with THC inputs if Analog Input 1 is also used as a THC input.

**** For mA input types, to ensure loop continuity when the controller is switched off, fit a 2V7 Zener diode as shown.

Note. 3-lead RTD: 3 leads must have equal resistance, not exceeding 20 Ω each.

Fig. 4.10 Standard Analog Inputs (1 and 2)

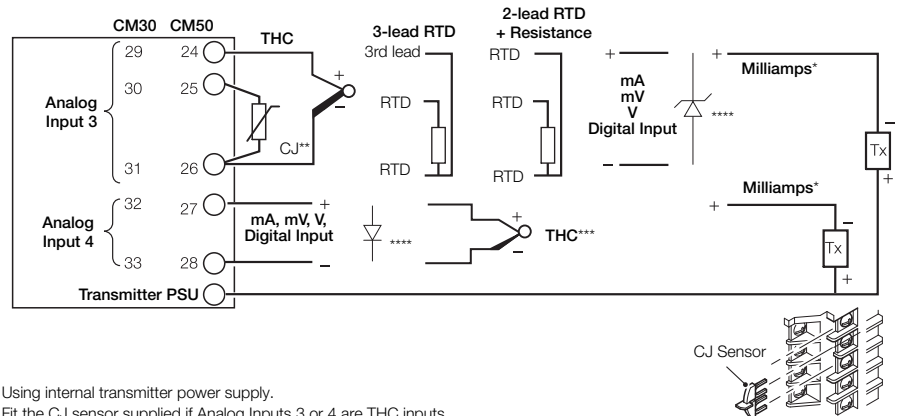

* Using internal transmitter power supply.

** Fit the CJ sensor supplied if Analog Inputs 3 or 4 are THC inputs.
(Alternatively, it is possible to use an external fixed cold [reference] junction, if the controller is programmed for use with millivolt inputs and the appropriate thermocouple linearizer is selected.)

*** Analog Input 4 can be used only with THC inputs if Analog Input 3 is also used as a THC input.

**** For mA input types, to ensure loop continuity when the controller is switched off, fit a 2V7 Zener diode as shown.

Note. 3 Leads must have equal resistance, not exceeding 20 Ω each.

Fig. 4.11 ControlMaster CM30 and CM50 Optional Analog Inputs (3 and 4)

4.5.5 Frequency / Pulse Input

Note. This input is designed primarily for use with flowmeters.

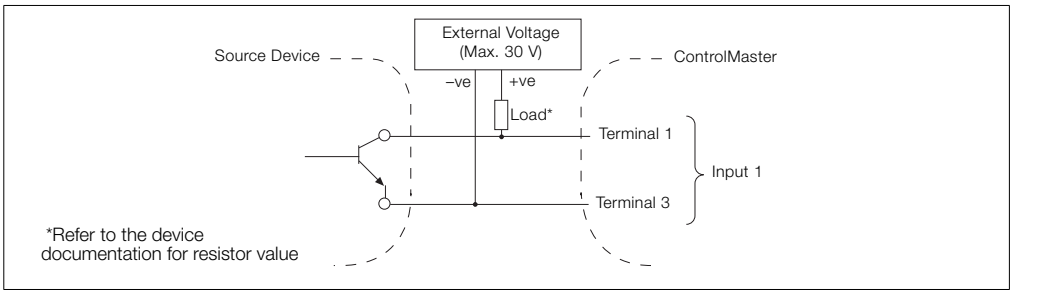

Fig. 4.12 Frequency / Pulse Input

4.5.6 Digital Input / Output

Note. Digital input and open collector digital output connections are shown in Fig. 4.13 – see page 113 for Digital Input / Output type options.

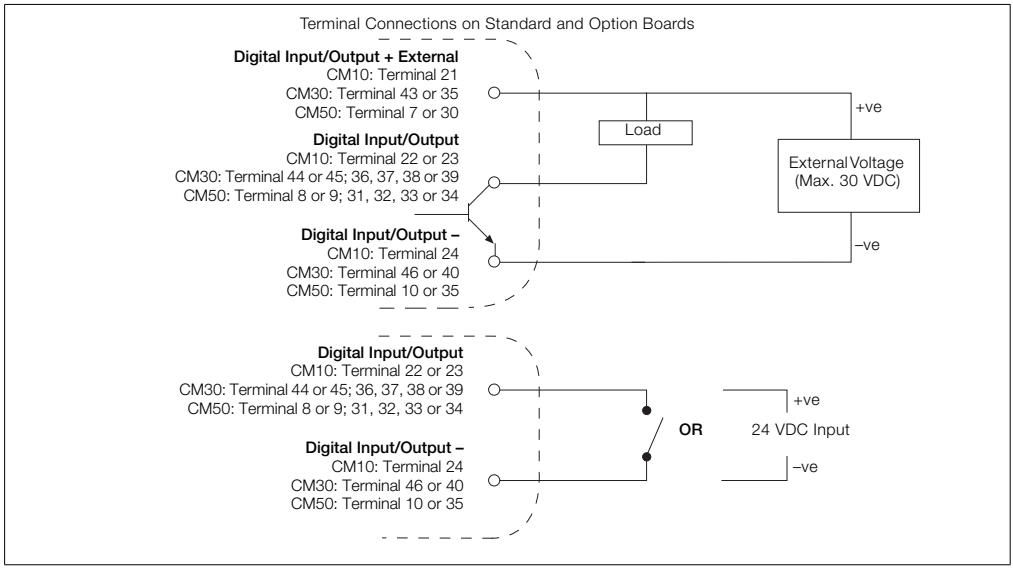

Fig. 4.13 Digital Input and Open Collector Digital Output Connections

5 Operator Level Menus

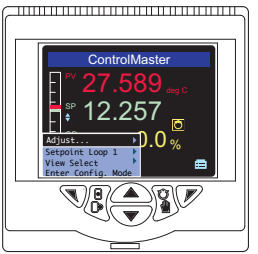

Operator level menus are used to adjust setpoint(s) and output(s), select setpoints, select the view and to enter *Basic* and *Advanced* modes (via the *Access* level).

To access *Operator Level* menus:

1. From the *Operator Page*, press ◥ to view the available menus.
2. Use the ▲ / ▼ keys to scroll through the menus and menu options.
3. Press ◤ to expand menu levels and to select menu options or press ◥ to return to the previous menu.

Menu functions are described in Table 5.1.

Autotune	Used to start or stop an autotune routine. This menu is enabled only if *Autotune* mode is *On* – see page 29.
Adjust	Enables a value to be adjusted using the ▲/▼ keys. The ▲▼ icon next to a value indicates the current adjustable selection.
Setpoint Select	Selects the local setpoint to be used (displayed only if more than 1 local setpoint is configured).
Alarm Acknowledge	Acknowledges any active but unacknowledged alarms.
View Select	Selects the *Operator* view to be displayed.
Enter Advanced Level	Displays the *Access Level* selection views – see Section 5.4, page 26 for security options.

Table 5.1 Operator Level Menu Functions

5.1 Diagnostic Status Bar

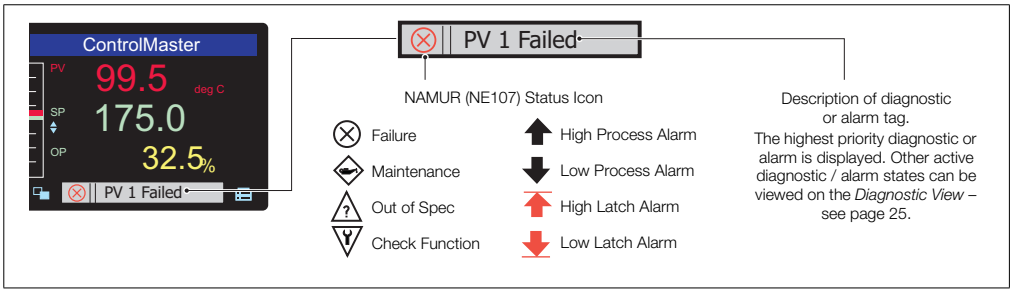

Fig. 5.1 ControlMaster Diagnostic Status Bar (ControlMaster CM30 Shown)

5.2 Diagnostic View

The *Diagnostic View* can be selected from the *Operator / View Select* menu. All currently active diagnostic alarm states are displayed in the *Diagnostic View*.

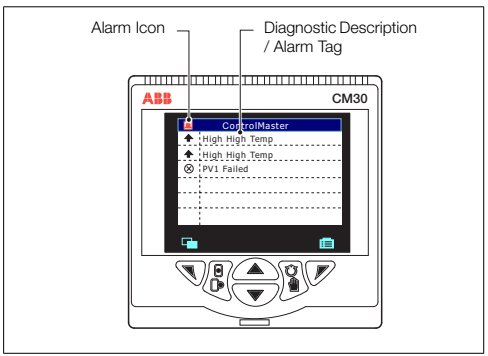

Fig. 5.2 ControlMaster Diagnostic View (ControlMaster CM30 Shown)

5.3 Security Options

Passwords can be set to enable secure end-user access at 2 levels: *Basic* and *Advanced* The *Service* level is password-protected at the factory and reserved for factory use only.

Passwords are set, changed or restored to their default settings at the *Device Setup / Security Setup* parameter – see page 38.

Note. When the controller is powered-up for the first time the *Basic* and *Advanced* level can be accessed without password protection. Protected access to these levels must be allocated on-site as required.

5.4 Access Level

Level	Access
Logout	Displayed after *Basic* or *Advanced* levels are accessed. Logs the user out of Basic or *Advanced* level. If passwords are set, a password must be entered to access these levels again after selecting *Logout*.
Read Only	Enables all parameter settings to be viewed
Basic	Enables access to the *Basic* setup level and adjustment of *PID* (see page 30) parameters, autotuning configuration and adjustment of alarm trip points.
Advanced	Enables configuration access to all parameters.
Service	Reserved for use by authorized service personnel.

Table 5.2 Access Levels

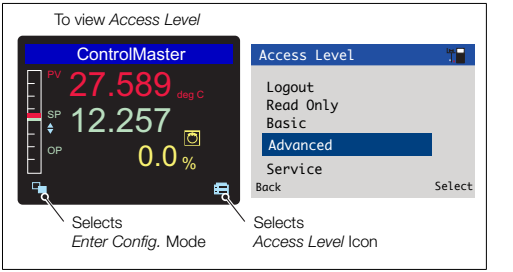

Fig. 5.3 Access Level

Note. A 5-minute time-out period enables a user to return to the *Operator* page and re-access the previous menu (displayed at exit) without re-entering the password. For periods over 5-minutes (or if *Logout* is selected), a password must be re-entered to access protected levels.

6 Basic Level

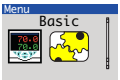

The *Basic* menu provides access to the tunable control settings and setpoint values.

Loop 1 Setpoints	
Local Setpoint 1 (4)	The local setpoint value required. If this value is adjusted in the *Operator Level* (see page 22) its value here is also updated.
RSP Ratio	If the remote (external) setpoint is selected, the control setpoint value is (ratio x remote setpoint input) + bias. **Note**. This parameter is available only if the template selected has remote setpoint – see page 101.
RSP Bias	Sets the remote setpoint bias in engineering units. **Note**. This parameter is available only if template selected has remote setpoint or ratio.

…Basic / …Loop 1 Setpoints

Ramp Mode

The ramping setpoint facility can be used to prevent a large disturbance to the control output when the setpoint value is changed. The rate set applies to both the local and the remote setpoints.

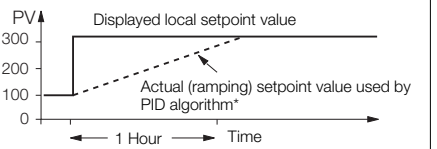

*Example: Ramp Rate = 200 Increments/hr

Ramp Rate

Sets the ramp rate required in engineering units / hour.

Note. Applicable only if *Ramp Mode* is *On*.

Loop 1 Control

On/Off Hysteresis

Sets the hysteresis value in engineering units.

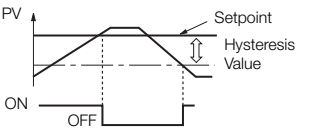

Reverse Acting Control Output

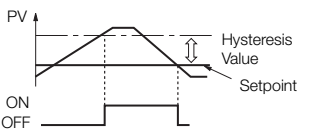

Direct Acting Control Output

Note. Applicable only if Control Type is On/Off – see page 55.

...Basic / ...Loop 1 Control

Mode — Turns the *Autotune* functionality on or off.
When set to *On*, an *Autotune* can be started from the Operator level menus – see page 22.

Autotune

Autotune Operation

Autotune is a user-activated feature that enables automatic setting of the controller *PID* parameters (see page 30) using an 'at setpoint type' algorithm. *Autotune* changes the controller output and then monitors the process response to calculate the optimum *PID* settings. *Autotune* uses a relay type function with hysteresis that initiates a controlled oscillation in the process. New *PID* parameters are calculated and stored in the controller automatically. **Note**. To achieve the best results from *Autotune*, switch the controller to *Manual* control mode (see page 5) and adjust the output until the PV is stable (close to the normal setpoint) before initiating *Autotune*.

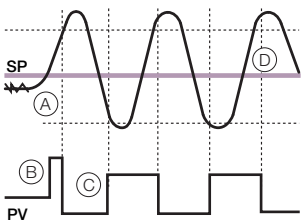

1. Set the first step value and dynamics required. For best results, select the largest initial output step size that can be tolerated by the process.
2. *Autotune* is enabled only if the control type is *PID*.
3. Start *Autotune* from the *Operator* menu.
4. Monitors a noise (A) and calculates a hysteresis value.
5. User-defined initial step in the output (B). When the process exceeds the hysteresis value the output is stepped down.
6. Adjusts output amplitude automatically (C) so PV disturbance is kept to minimum required.
7. When consistent oscillation is established (D), the Autotune process stops. Optimum settings are calculated from the process dynamics monitored.

…Basic / …Loop 1 Control / …Autotune

First Step	Defines the maximum size of the first output step in the autotuning process. *Autotune* adjusts the output step magnitude according to the process noise and response to provide a reliable measurement of the process characteristics with the minimum disturbance of the process. The maximum setting provides the largest output step possible from the current output value.
Dynamics	Used to configure *Autotune* to give optimum results according to the type of process being controlled.
Normal	Determines if derivative control is required automatically and calculates the control settings accordingly.
Deadtime	Sets the proportional and integral terms to give optimum control for the deadtime process (higher proportional band [lower gain] and shorter integration time).
PI	Used for processes where it is known that derivative control is not required.
Reset	If the controller is transferred to another process or duty, *Autotune* must be reset. The current *PID* (see page 30) settings are retained but the internal process data is cleared ready for a completely new process with different characteristics.
PID	The controller's *PID* (proportional, integral and derivative control) settings (see page 30) can be commissioned using the *Autotune* (see page 29) function and / or they can be adjusted manually.
Proportional Band 1	Set as % of engineering range.
Integral Time 1	Set in seconds per repeat. To turn integral action off, set to 0 or 10000 s.

...Basic / ...Loop 1 Control / ...PID

Derivative Time 1	Set in seconds.
Manual Reset	When the *Integral Time* is *Off,* the manual reset parameter is activated. When the process variable is equal to the control setpoint, the output value is equal to the manual reset value.

Note: The controller is shipped with null PID values (P=100, I=off & D=0). To enable the controller to control the process it is connected to, these values must be tuned accordingly. This can be achieved via the AutoTune function or manual adjustment. If the controller is tuned manually the table below provides details of some suggested values to start from. These values are only suggested starting values and should not be used as an alternative to proper tuning of the Controller.

Process Type	**P**	**I**
Temperature (fast)*	10	30
Temperature (slow)*	10	300
Pressure (fast)	100	1
Pressure (slow)	10	30
Level (fast)	100	1
Level (slow)	10	30
Flow	100	1

*For temperature loops, control performance can be improved via the use of Derivative.
A suggested starting value is 1/6th of the Integral value.

...Basic

Loop 1 Mot Valve

Example of Motorized Valve With Feedback

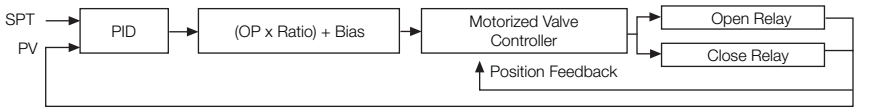

Motorized Valve Output Without Feedback (Boundless)

A motorized valve output without feedback (boundless) process controller provides an output that is effectively the time derivative of the required regulator position (the controller signals the regulator, not where to go to [position derivative], but in the direction to travel and how far to move) by a series of integral action pulses. Therefore, the controller does not need to know the absolute regulator position and is not affected when the regulator reaches the upper or lower limit, as determined by the regulator's limit switches (hence the term 'boundless').

When a deviation from setpoint is introduced, the regulator is driven for a length of time equivalent to the proportional step. The regulator is then driven by integral action pulses until the deviation is within the deadband setting.

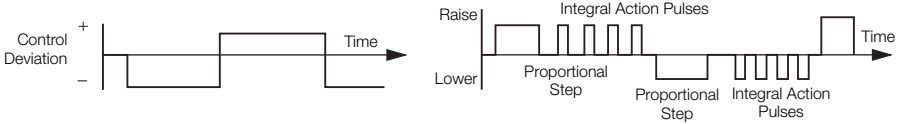

...Basic / ...Loop 1 Mot Valve

Calculation for Control Pulses (Boundless Control)

The following calculations are for guidance when setting Deadband, proportional and integral values.

The Deadband on the ControlMaster is set in engineering units, but in order to be applied to the calculations it must be set as a %, this can be calculated in the following way:

$$\% \text{ Deadband} = \frac{\text{Deadband (eng units)}}{\text{Eng Hi - Eng Lo}} \times 100$$

Minimum 'ON' time of integral action pulses (for a fixed control deviation)

$$= \frac{\text{Travel Time x Deadband\%}}{\text{\% Proportional Band}} \text{ (in seconds)}$$

Minimum (approximate) time between integral action pulses (for a fixed control deviation)

$$= \frac{\text{Integral Action Time x Deadband\%}}{\text{2 x Control Deviation}} \text{ (in seconds)}$$

Duration of the proportional step

$$= 2 \times \frac{\text{(\% Control Deviation) x Travel Time in seconds}}{\text{(\% Proportional Band)}}$$

% Control Deviation

$$= \frac{\text{Setpoint - Process Variable}}{\text{Eng Hi - Eng Lo}} \times 100\%$$

Ratio* The required valve position = (Ratio x PID O/P) + Bias.

Bias*

*Applicable only for motorized valve with feedback only – see page 32.

…Basic / …Loop 1 Mot Valve

Deadband	**Example**: If the valve is set to be driven to the 50 % open position and the deadband is set to 4 %, the motor stops driving when the position feedback is 48 %. The deadband is between 48 % and 52 %. 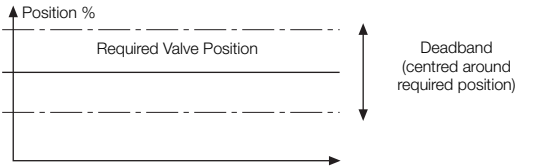
Travel Time	For motorized valve without feedback (see page 32), this parameter is used to control the valve movement. For motorized valve with feedback (see page 32), the time entered is compared with the actual valve movement. If the valve is sticking, a diagnostic message is generated (set *Travel Time* to 0 s to disable this feature).

...Basic

Loop 1 Time Prop	The active time of the output pulse is proportional to the value of the control output. With 100% output the pulse is active for the complete cycle time, for example: **Note**. Applicable only if *Output Type* is *Time Prop* or *Split Output* (and one output is a relay or a digital output) – see page 36. 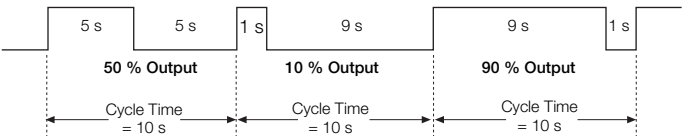
Cycle Time 1 (2)	The cycle time to be used with time proportioning outputs. For split outputs, the *Cycle Time 1* setting applies to *Output 1* and *Cycle Time 2* setting applies to *Output 2*.
Alarm 1 (8)	
Trip	The alarm trip level in engineering units. See *Process Alarm* (page 64) for parameter details.

7 Advanced Level

7.1 Device Setup

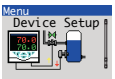

Provides access to standard setup parameters to determine the type of control / indication required. Also provides the ability to create non-standard configurations for special application requirements.

Initial Setup

App Template	Application templates enable standard configurations for particular applications to be created as simply as possible. Select the appropriate template before configuring any other parameters. When a template is selected, the controller assumes the preset form for that template. The inputs and function blocks are soft-wired automatically to perform the selected function. **Note**. See Section 8, page 101 for templates available to controllers with *Standard* functionality.
Loop 1 Output Type	The appropriate output function block, relay, digital and analog outputs are configured and soft-wired – see Appendix D, page 124 for output assignments.
Loop 1 Split O/P	These types of outputs split the *Control (PID)* output signal (see page 30) into 2 signals. The linear relationship between the PID output and the 2 outputs can be configured in the control configuration.

...Device Setup / ...Initial Setup

Instrument Tag	A 16-character alphanumeric tag, displayed on *Operator* pages.
Mains Freq	Used to set the internal filters to reduce mains power frequency interference.
Config Action	The *Config Action* parameter is used to determine how the controller and controller outputs behave when the *Advanced* level is entered – see page 36.
Continue	The controller continues to operate as in *Operator* level. Outputs continue to operate as normal.
Hold	Puts the controller into *Manual* control mode. When the *Advanced* level is exited, the controller returns to the pre-*Configuration* mode of operation. Digital, relay and analog outputs are held at their value / state when *Configuration* mode is entered.
Inactive	Puts the controller into *Manual* control mode. When the *Advanced* level is exited, the controller returns to the pre-configuration mode of operation. Digital and relay outputs are turned off. Analog outputs are set to 0 mA.
Custom Template	If this parameter is enabled, it enables the internal function blocks to be re-linked to create custom configurations for special application requirements. These sources are configured in *Device Setup / Custom Config* – see page 38.
Reset to Defaults	Resets all configuration parameters to their default values.

...Device Setup

Security Setup	2 Security access levels are provided, each protected by a password of up to 6 alphanumeric characters. **Note**. Passwords are not set at the factory and must be entered by the end user(s).
Basic Password	*Basic* level provides access to the *Basic* level – see Section 6, page 27.
Advanced Password	Provides access to all configuration parameters – see Section 7, page 36.
Reset Passwords	Resets all passwords to factory values.
Custom Config	
Loop 1 (2) PV	Sets the source for the process variable.
Loop 1 (2) Split O/P	Sets the source for output to the split output function block.
Loop 1 (2) Valve Mode	Sets the valve operation mode, *Feedback* or *Boundless* – see page *32*.
Loop 1 (2) Valve O/P	Sets the control input to the valve function block.
Loop 1 (2) Valve FB	Sets the source for position feedback input.
Loop 1 (2) TP OP1	Sets the source for control input to the time proportioning block for *Output 1* – see page 36.
Loop 1 (2) TP OP2	Sets the source for control input to the time proportioning block for *Output 2* see page 36.
Loop 1 (2) RSP	Sets the source for the remote (external) setpoint.

7.2 Display

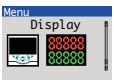

Used to setup the operator page, displayed language and display hardware settings.

Language	Selects the language on the controller's local display.
Operator Templates	Enables up to 4 operator pages to be configured to suit the application requirements.
Page 1 (4) Template	The operator template type. The functions available in each template type are displayed as abbreviations, for example: *Single PV, SP & OP* Key to abbreviations: ■ PV = process variable ■ SP = setpoint ■ MOP = master output (*Auto/Manual* [see page 40] status and analog backups) ■ OP = control output ■ Loop 1 (2) = displays PV, SP and SP for Loop 1 (2) ■ AR = actual ratio ■ DR = desired ratio

...Display

Operator Functions	
Autoscroll	When enabled (*On*), operator pages are scrolled continuously at intervals of 10 seconds per page.
Soft Key Function	Assigns a dedicated function to the Navigation key (right) – see page 5.
Configuration	Displays the *Access Level* enabling selection of configuration levels.
Auto/Manual	Toggles between *Auto* and *Manual* control modes.
Local/Remote	Toggles between *Local* and *Remote* setpoint modes.
Scroll View	Scrolls through each available *Operator* view.
Alarm Ack	Acknowledges all active unacknowledged alarms.
Toggle Signal	Provides a source that toggles between 2 states – can be assigned to outputs or used to select sources.
Edge Signal	Provides an edge-triggered source that is active on key press. Can be assigned to outputs or used to select sources

...Display / ...Operator Functions

Auto Manual Enable	Turns on / off the ability for *Auto* and *Manual* control mode to be changed in *Operator Level*.
Local Remote Enable	Turns on / off the ability for *Local* and *Remote* setpoint mode to be changed in *Operator Level*.
Alarm Ack. Enable	Turns on / off the ability to acknowledge alarms from the front panel.
SP Adjust Enable	Turns on / off setpoint adjustment in the *Operator Level*.
Settings	Adjusts display settings to suit ambient conditions.
Brightness	Increases / Decreases the display brightness to suit local environmental conditions.
Contrast	Increases / Decreases the display contrast to suit local environmental conditions. **Note**. Enabled for CM30 and CM50 only.
Date & Time	Sets the date format, local time and date and daylight saving start / end times.
Date Format	Selected from: DD–MM–YYYY, MM–DD–YYYY, YYYY–MM–DD.
Time & Date	Sets the controller's time and date.
Daylight Saving	Sets daylight saving parameters.

...Display / ...Date & Time / ...Daylight Saving

DS Region	
Off	Daylight saving is disabled.
Europe	Standard daylight saving start and end times are selected for Europe automatically.
USA	Standard daylight saving start and end times are selected for USA automatically.
Custom	Used to create custom daylight saving start and end times manually for regions other than Europe or USA. **Note**. Enables *Daylight Start Time* and *Daylight End Time* parameters.
DS Start Time	The start time selected from 1-hour increments. **Note**. Displayed only when the *DS Region* sub-parameter is *Custom*.
DS Start Occur DS End Occur	The day within the month that daylight starts / ends – for example, to set daylight saving to start (or end) on the second Monday of the selected month, select *Second*.
DS Start Day DS End Day	The day of the month daylight saving starts / ends. **Note**. The *Daylight Start / End Occur* parameters must be valid within the month for the selected day.
DS Start Month DS End Month	The month daylight saving starts / ends.

7.3 Input/Output

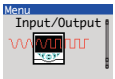

Enables analog and digital inputs / outputs and relays to be configured.

Analog Inputs

Analog Input 1 (4)*

Input Type	Input types comprise: Millivolts, Milliamps, Volts, Resistance (Ohms), RTD, Thermocouple, Digital volt-fre 24V Digital, Freq. Input, Pulse Input. Additional *Input Type* comments:
Digital Volt Free	Acts as a digital input.
Freq. Input	Sets the maximum frequency and equivalent flow rate in the engineering range 0 to 6 KHz. (A frequency of 0.01 to 6 KHz can be used to create an analog value.)
Pulse Input	This parameter counts pulses and is recommended only for use with electromagnetic flowmeters.

*Analog Inputs 2 to 4: *Freq Input, Pulse Input* and *Resistance* not available. A *Thermocouple* input type can be set only if the first input is set to *Thermocouple*.

... Input/Output / ...Analog Input 1 (4)

Elect. Low

Sets the required electrical range.

Note. Applicable only to *Millivolts, Milliamps, Volts* and *Ohms.*

Linear Inputs	Standard Analog Input	Accuracy (% of Reading)
Millivolts	0 to 150 mV	0.1 % or ±20 µV
Milliamps	0 to 45 mA (CM10 & CM30) 0 to 50 mA (CM50)	0.2 % or ±4 µA
Volts	0 to 25 V	0.2 % or ±1 mV
Resistance Ω (low)	0 to 550 Ω	0.2 % or ±0.1 Ω
Resistance Ω (high)	0 to 10 kΩ	0.1 % or ±0.5 Ω

Elect. High

Sets the required electrical range.

Note. Applicable only to *Millivolts, Milliamps, Volts* and *Freq. Input*.

Linearizer

Selects the linearizer type required to condition the input signal.

Notes. For thermocouple applications using an external fixed cold junction, set *Input Type* to *Millivolts* (see page 43) and select the appropriate linearizer type.

Not applicable for *Pulse Input*, *Digital volt-free*, *24V Digital* parameters – see page 43.

... Input/Output / ...Analog Input 1 (4)

Eng Units	The selected units are used by the linearizer and displayed in the *Operator* pages. Not applicable for: *Pulse Input*, *Volt Free Digital*, *24Volt Digital* parameters. *Thermocouple* and *RTD* inputs (see page 43) are restricted to *deg C*, *deg F*, *Kelvin* – see Appendix C, page 122 for analog input (engineering) units.
Eng. Dps	Engineering decimal places – selects the resolution required to be displayed for the input value.
Eng Low	Specifies the engineering low (minimum) value. For example, for an electrical input range of 4.0 to 20.0 mA, representing a pressure range of 50 to 250 bar, set the *Eng Low* value to 50.0 and the *Eng High* value to 250.0. Not applicable for *Pulse Input* – see page 43.
Eng. High	Specifies the engineering high (maximum) value. Not applicable for *Pulse Input*. **Note**. See *Eng Low* for range example.

... Input/Output / ...Analog Input 1 (4)

Pulse Units	Selects the unit of measure for the pulse input type.
Pulse / Unit	Sets the number of pulses required to represent 1 pulse unit (as set above), for example, if *Pulse Units* = Kl and *Pulse / Unit* = 10.00000000, each pulse represents 0.1 Kl, 10 pulses = 1 Kl.
Broken Sensor	If an input failure occurs, the input value can be configured to drive in a set direction.
None	No action taken.
Automatic	If the value of failed input is below *Eng Low* (see page *45*), the input value is driven to the minimum downscale value; otherwise it is driven to the maximum upscale value.
Upscale	The input is driven to the maximum upscale value.
Downscale	The input is driven to the minimum downscale value.
Filter Time	The input is averaged over the time set.
Fault Detect	Sets a tolerance level (in % of engineering range) to allow for deviation of the input signal above or below the engineering range before an input failure is detected.
Zero Adjustment Span Adjustment	The *Zero Adjustment* and *Span Adjustment* parameters enable fine tuning of the inputs to eliminate system errors. Apply a known input value and adjust until the required input value is displayed. Normally, *Zero Adjustment* is used with input values close to *Eng Low* (adjustment is performed by applying an offset to the reading) and *Span Adjustment* is used with values close to *Eng High* (adjustment is performed by applying a multiplier to the reading).

...Input/Output / ... ...Analog Input 1 (4)

Analog Outputs	The analog outputs can be configured to retransmit any analog value and have a configurable range from 0 to 24 mA. Output 1 can also be configured to function as a digital output.
Analog Output 1 (2)	**Note**. *Analog Output 2* is available only if an option board is fitted – see pages 15 (CM10), 16 (CM30) and 17 (CM50).
Output Type	Selects the analog or digital output (applicable only to Analog Output 1).
Source	Selects the parameter to be assigned to the output – see Appendix A, page 116 for description of sources.
Sensor Calibration	An additional adjustment to remove known sensor errors. **Note**. This adjustment is applied after the input calibration.
Adjusted Value	The input value with the sensor calibration applied.
Offset adjust	Enter the required offset in engineering units.

...Input/Output / ... ...Analog Outputs

Elect. Low*	The current output required when the source value is equal to the *Eng Low* value – see page 45.
Elect. High*	The current output required when the source value is equal to the *Eng High* value – see page 45.
Auto Eng Range*	If enabled (*On*) the *Eng High* and *Eng Low* values for the output are set to the engineering range values of the source automatically.
Eng Low*	The minimum engineering range output value.
Eng High*	The maximum engineering range output value.
Polarity**	Sets the polarity of the output signal. If set to *Negative*, the output is energized when the source is inactive. If set to *Positive,* the output is energized when the source is active.

*Not applicable if *Output Type* is *Digital* or *Source* is *None*.
**Not applicable if *Output Type* is *Analog* or *Source* is *None*.

...Input/Output

Digital I/O	
Digital IO 1 (6)	
Type	Sets the *Digital IO* to operate as an output or an input.
Off	No action taken.
Output	The *Digital IO* operates as an output.
Volt Free	High input detected when volt-free switch across input is closed.
24 Volt	Digital input low < 5 V, high > 11 V (maximum input 30 V).
TTL	Digital input low < 0.8 V, high > 2 V.
Output Source	Selects the digital signal to be assigned to the output – see Appendix A.1, page 116 for description of sources.
Polarity	Sets the polarity of the output signal.
Positive	For an output, the output is high if the source is active. For an input, the input is active if a high signal is detected.
Negative	For an output the output is high if the source is inactive. For an input, the input is active if a low signal is detected.

...Input/Output

Relays	
Relay 1 (4)	
Source	Selects the digital signal to be assigned to the relay – see Appendix A.1, page 116 for description of sources.
Polarity	Sets the polarity of the relay.
Positive	The relay is energized If the source is active.
Negative	The relay is energized If the source is inactive.

7.4 Control

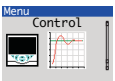

Enables the setpoints, control functions and outputs to be configured.

Loop 1 Setpoints	The controller can configure independent local setpoint values, remote setpoint functionality and limit the absolute values and rate of change of the control setpoint.
Low Limit High Limit	The setpoint *Low / High Limit* parameters define the maximum and minimum values for the local and / or remote setpoints. Setpoint limits do not apply in *Manual* control mode with local setpoint tracking enabled. If the setpoint is out of limits when *Auto* control mode is selected, the setpoint value can be adjusted only towards its limits.
No. of Local SP's	Selects the number of independent local (internal) setpoints required. Local setpoints can be selected from the *Operator Level* menu (see page 22) or via a digital signal. **Note**. 4 Setpoints are available on CM30, CM50 controllers, 2 setpoints are available on CM10 controllers.
Local Setpoint 1 (4)	If the value is adjusted in the *Operator* level, its value here is also updated.

…Control / …Loop 1 Setpoints

Track Mode	The local (internal) setpoint can track another value according to the setpoint tracking mode selected.
Off	No tracking.
Local	The local (internal) setpoint tracks the process variable when *Manual* control mode is selected.
Remote	The local (internal) setpoint tracks the remote (external) setpoint when in *Remote Setpoint* mode. If the controller is put into *Manual* control mode, the setpoint reverts from *Remote* to *Local*. **Note**. Available only if the template selected has remote setpoint functionality.
Local and Remote	**Note**. Available only if the template selected has remote setpoint functionality.
RSP Ratio	When the remote (external) setpoint is selected the control setpoint value is: (ratio x remote setpoint input) + bias
RSP Bias	Sets the remote setpoint bias in engineering units – see Appendix C, page 122 for description of analog input (engineering) units.

...Control / ...Loop 1 Setpoints

RSP Fault Action	The action required when a fault occurs with the remote setpoint.
No Action	No fault action.
Local	Selects the local (internal) setpoint mode.
Local Default	Selects the local (internal) setpoint mode and sets its value to the default setpoint.
Default Setpoint	Sets the value required for the local (internal) setpoint under remote setpoint fault conditions.
Ramp Mode	See *Basic* Level, page 28.
Ramp Rate	See *Basic* Level, page 28.
Select Sources	Selection of local setpoints and changing the setpoint mode (between local [internal] and remote [external]) can be controlled by digital signals; either from internal digital signals (for example, alarm states) or from external signals via digital inputs (or digital communications) – see Appendix A.1, page 116 for description of sources.
LSP 1/2 Toggle	The (level-triggered) source required to select either local setpoint 1 (LSP1) or local setpoint 2 (LSP2). A low signal locks the local setpoint as LSP1; a high signal locks it as LSP2. 

…Control / …Loop 1 Setpoints / Select Sources

LSP1 (4) Select The source required to select local setpoint 1 (LSP1) as the current local setpoint. Selection is made on the rising edge of the digital signal.

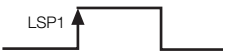

Local Select The source required to select local setpoint 1 (LSP1) as the current local setpoint. Selection is made on the rising edge of the digital signal.

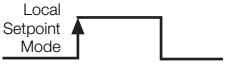

Remote Select The source required to select remote setpoint mode.

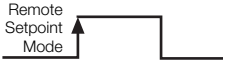

Loc/Rem Toggle The (level-triggered) source required to select either local or remote setpoint mode.

A low signal locks the controller in local setpoint mode and a high signal locks it in remote setpoint mode. The edge-triggered local and remote selection sources and the front panel keys do not operate when this function is used. If the remote setpoint fails while selected using this digital selection and the *RSP Fault Action* parameter is not set to *No Action* (see page 53), the mode changes to *Local*.

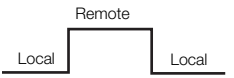

As soon as the remote setpoint is no longer in a failed state it reverts to *Remote* mode (if it is still selected by this function).

...Control

Loop 1 Control	Configures the basic type of control required and the *PID* (see page 30) and *Autotune* (see page 29) settings.
Control Type	Selects the basic type of controller required.
PID	Standard proportional, integral and derivative control.
On/Off	A simple 2-state control. **Note**. Loop 1 output type must be set to *Time Prop* – see page 35.
Control Action	If the required controller action is known it can be set using this parameter. Otherwise it can be set to *Unknown* and *Autotune* (see page 29) determines and selects the correct action.
Direct	For applications where an increasing process variable requires an increasing output to control it.
Reverse	For applications where an increasing process variable requires a decreasing output to control it.
Unknown	For applications where the control action is not known (run *Autotune* to set the control action automatically).
On/Off Hysteresis	Refer to *Basic Level* on page 28.
Autotune	Refer to *Basic Level / Autotune* on page 29.
PID	Refer to *Basic Level / PID* on page 30.

...Control

Loop 1 Output	Used to set the output limits, tracking rates, slew rates and output action on power failure or process variable failure.
Limits	**Note**. When used with split output the limits restrict the *PID* algorithm output (see page 30) before the split output range values are calculated.
Limit Action	Selects when the output limits should be applied (*Off*, *Auto* + *Manual*, *Auto Only*).
Low/High Limit	Sets minimum / maximum controller output in %.
Failure Actions	
Power Recovery	Used to select the default power failure mode required following a power interruption or failure.
Last Mode	The last *Power Recovery* mode selected.
Man – Last	*Manual* control mode using the last output before power failure.
Man – 0 %	*Manual* control mode with output set to 0 %.
Man – 100 %	Manual control mode with output set to 100 %.

...Control / ...Loop 1 Output / ...Failure Actions / ...Power Recovery

Man – Default	*Manual* control mode with output set to default value.
Auto Mode	*Auto* control mode with integral term reset.
Auto – Last	*Auto* control mode with integral term restored to its last value before the power failure.
PV Fail Action	Determines the controller output when the PV (process variable) input fails.
No Action	No action is taken if the PV input fails.
Man – Hold O/P	Puts the controller into *Manual* control mode and holds the output at its value immediately prior to the PV failure.
Man – Default O/P	Puts the controller into *Manual* control mode and sets the output to the default output value.
Default Output	This parameter is used in conjunction with *Power Recovery* (see page 56) and *PV Fail Action* settings (see above). For split outputs this value refers to the *PID* algorithm (see page 30) before the split range values are calculated.

...Control / ...Loop 1 Output

A/M Select Sources	The selection of A/M (*Auto / Manual*) control modes of operation can be controlled by digital signals; either from internal digital signals (for example, alarm states) or from external signals via digital inputs (or digital communications).
Auto Select	The source required to select *Auto* control mode. Selection is made on the rising edge of the digital signal. 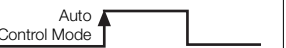
Manual 1 (2) Select	The source required to select *Manual* control mode. Selection is made on rising edge of the digital signal. The output value is set according to *Manual 1 (2) Config O/P* (see below). 
Manual 1 (2) Output	Determines the Manual output value to be set when the controller is put into *Manual* control mode (see page 5) using *Manual 1 (2) Select* source.
Last Auto O/P	Holds the output at its value prior to switching to *Manual* control mode.
Man – 0%	Sets the output to 0 %.
Man – 100%	Sets the output to 100 %.
Config Value	Sets the output to the value set in *Manual 2 Config O/P*.

...Control / ...Loop 1 Output

Manual 1 (2) Config O/P	Used when *Manual 1 (2) Output* is set to *Config Value*.
A/M Toggle	The source required to toggle between A/M (*Auto / Manual*) control modes. When the digital signal is high, the controller is locked in *Manual* control mode (the front panel controls [see page 5] and other digital select signals have no effect). When the digital signal is low, *Auto* control mode is selected. When in the low state, either the front panel controls or edge-triggered digital signals can be used to put the controller into *Manual* control mode. 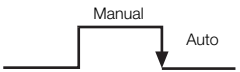
A/M Output	Sets the (manual) output value when the controller is put into Manual mode using *A/M Toggle* source
Last Auto O/P	Holds the output at its value prior to switching to *Manual* control mode.
Man – 0%	Sets the output to 0 %.
Man – 100%	Sets the output to 100 %.
Config Value	Sets the output to the value set in *A/M Config O/P*.
A/M Config O/P	Used when *A/M Output* is set to *Config Value*.

…Control / …Loop 1 Output

Slew Rate	The (output) *Slew Rate* restricts the maximum rate of change of the control output. 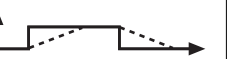
Function	Selects if the output *Slew Rate* function is enabled and when it applies.
Off	
Up and Down	The *Slew Rate* applies to increasing and decreasing output values.
Up	The *Slew Rate* applies to increasing output values.
Down	The *Slew Rate* applies to decreasing output values only.
Rate	The maximum rate of change of the control output (as % / s).
Disable Source	The (level-triggered) source required to disable *Slew Rate* control of the output. This source is level-triggered. 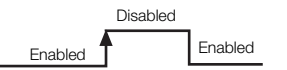

...Control /...Loop 1 Output

Tracking	Configures the control output follow a tracking signal when in *Auto* control mode. In *Manual* control mode, the output can be adjusted as normal. If the *Slew Rate* (see page 60) function is enabled, switching from *Manual* to *Auto* is bumpless. If the value set by the tracking signal differs to the manual setting, the output ramps to its expected auto value at the speed set in the *Slew Rate*. If the *Signal Source* is set to *None,* tracking is disabled and the normal *PID* output is provided as the control output.
Source Signal Source	Sets the source of the signal required to be tracked by the output in *Auto* control mode. If set to *None*, output tracking is disabled.
Mode	Selects the type of object tracking.
In Auto	Control output = tracking signal when in *Auto* control mode.
Auto + OP	Control output = tracking signal + change in *PID* output, when in *Auto* control mode.
When Enabled	When enable source is active, control output = tracking signal when in *Auto* control mode.
When Enabled + OP	When enable source is active and the controller is in *Auto* control mode, the control output = tracking signal + change in *PID* output.
Enable Source	Sets the digital signal to enable output tracking. **Note**. Applicable only if *Mode* is *When Enabled* or *When Enabled + OP*.

...Control

Loop 1 Split O/P*

The split output facility enables the *PID* control output (see page 30) to be split into 2 separate outputs. This enables heat / cool and other applications requiring dual outputs to be controlled. The linear relationship between the input from the *PID* algorithm and the 2 outputs is configured using the *Min* and *Max Input / Output* parameters (see below).

When operating with *Split O/P* in *Manual* control mode, manual adjustment is made to the input at the split output block (x axis). By default, the Operator page displays both output values (OP1 and OP2).

Heat / cool example

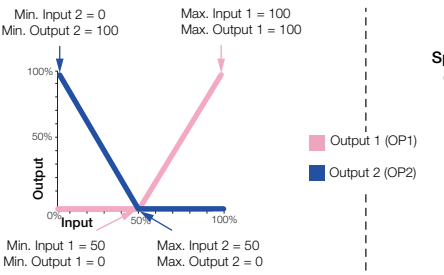

Split output example

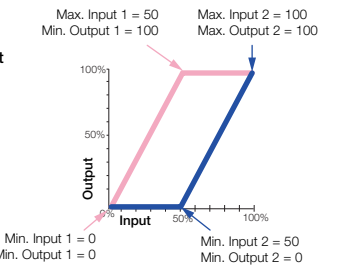

Loop 1 Time Prop See *Basic* level, page 27.

*Applicable only if the output type selected is *Split O/P* – see page 36.

7.5 Process Alarm



Used to configure up to 8 independent process alarms.

Process Alarm

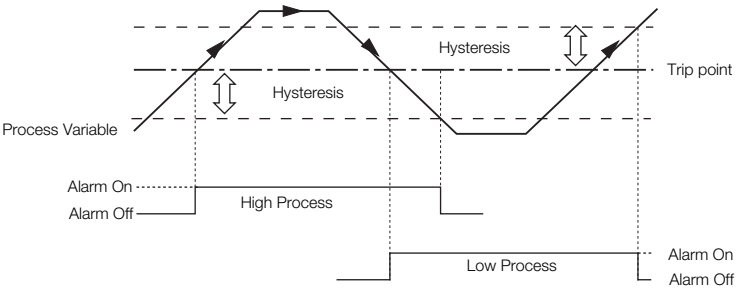

High and Low Process Alarm Action

...Process Alarm

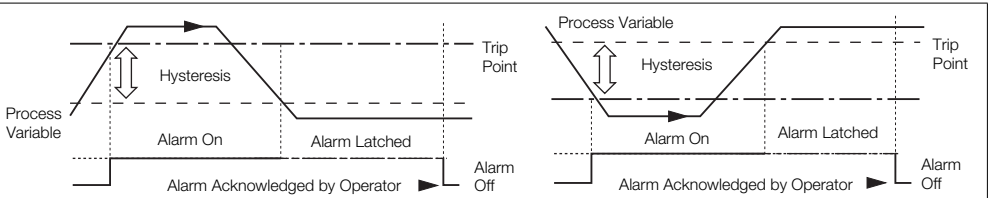

High and Low Latch Alarm Action

Alarm 1 (8)

Type	Alarm types comprise: *High Process*, *Low Process*, *High Latch*, *Low Latch*. (Deviation alarms are configured using a high or low process alarm and selecting *Deviation* as the source.)
Tag	The alarm *Tag* is displayed as a diagnostic message and appears in the *Diagnostic Status Bar* (see page 24) and the *Diagnostic* view in the *Operator Level* – 22.
Source	The analog source – see Appendix A.2, page 117 for description of sources.
Trip	Alarm trip level in engineering units.

...Process Alarm / ... Alarm 1 (8)

Hysteresis	Hysteresis trip level in engineering units. Activated at the alarm trip level but deactivated only when the process variable has moved into the safe region by an amount equal to the hysteresis value – see Process Alarm examples on page 63.
Time Hysteresis	If an alarm trip value is exceeded, the alarm does not become active until the *Time Hysteresis* value has expired. If the signal goes out of the alarm condition before the *Time Hysteresis* has expired, the hysteresis timer is reset.
Display Enable	Enables an alarm to be used for control purposes without it appearing as an active alarm state in the *Operator* level or *Diagnostic* view.
Acknowledge Source	The source required to acknowledge all active alarms. Acknowledge occurs on rising edge of the digital signal – see Appendix A.1, page 116 for description of sources. 
Enable Source	The source required to enable alarms. If the source is *None*, alarms are enabled – see Appendix A, page 116 for description of sources.

7.6 Profile

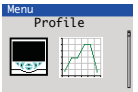

The *Ramp / Soak Profile* facility is a setpoint profile generator which can be used with any type of control process for more complex setpoint control. A *Profile* program is made up of *Ramps* (the setpoint is increased / decreased at a linear rate until it reaches the desired value) and *Soaks* (the setpoint is maintained at fixed value for a set time duration).

Introduction to Ramp / Soak Profile Control

- 1 program
- 10 programmable segments
- 5 segment types – *Soak, Ramp Rate, Ramp time, Step, End*
- Programmable time units – hours or minutes
- Programmable ramps – can be programmed as rates or time units
- Program Repeat – 0 to 10 times or continuously
- Program holdback hysteresis – separate settings for ramp and soak segments. Can be applied above, below or above and below the setpoint.
- Programmable start conditions – Program, Local Setpoint, Current PV
- Recovery action – determines profile operation under power fail / PV fail conditions
- Fast Run mode – runs program 8 times normal speed for test/commissioning

7.6.1 Ramp Types

The profile set point can be configured to increment in one of two-way: for a fixed period of time or for a number of engineering units per hour.

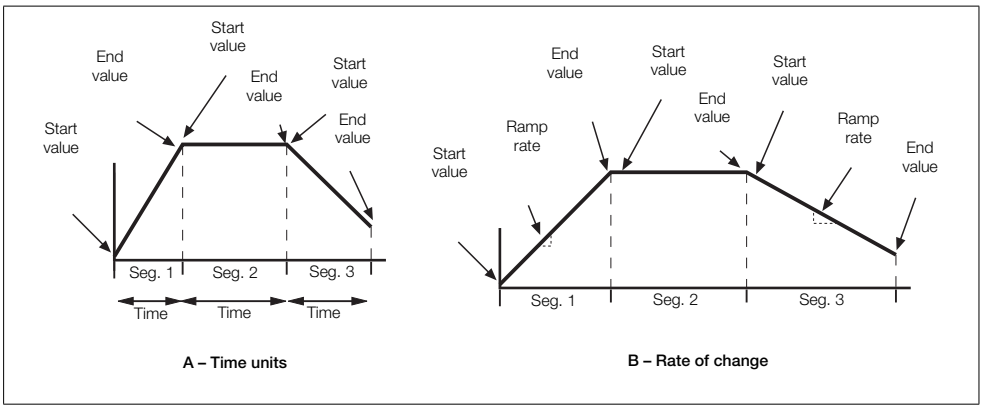

Fig. 7.1 Ramp Types

7.6.2 Guaranteed Ramp / Soak

If the process variable deviates from the set point by more than the hysteresis value, the program status is set to *HOLD* and Guaranteed ramp/soak is applied automatically.

Each program has two associated hysteresis values:

- Ramp – applied to ramping segments

and

- Soak – applied to soak segments

The hysteresis value can be set within the limits '0' to '9999' where a setting of '0' implies that no deviation from the set point value can be tolerated.

Hysteresis can be applied in one of four ways, with individual settings for each segment:

- None – hysteresis not applied, ramp/soak not guaranteed.
- High – hysteresis applied above set point (Holdback ('HOLD') set if PV > [SP + Hysteresis]).
- Low – hysteresis applied below set point ('HOLD' set if PV < [SP – Hysteresis]).
- High/Low – hysteresis applied above and below set point (HOLD set if PV > [SP + Hysteresis] or PV < [SP – Hysteresis]).

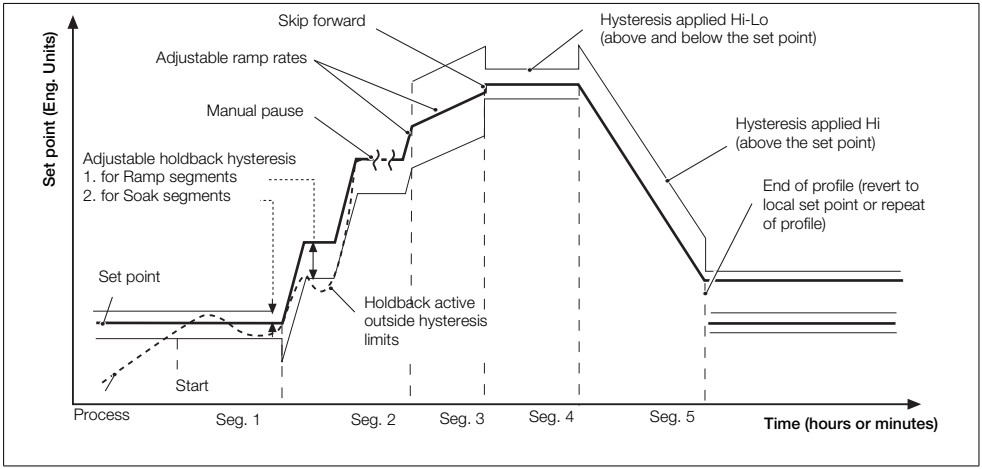

Fig. 7.2 Ramp Types

Note. Ramping segments can have a different hysteresis to soak segments.

7.6.3 Set Point Start Condition – Current PV

Selecting Current PV reduces the delay between the end of a program and the beginning of the next program. The process variable value is used as the program start point and the set point steps up to the process variable value. This has the effect of changing the overall segment time and maintains a constant ramp rate.

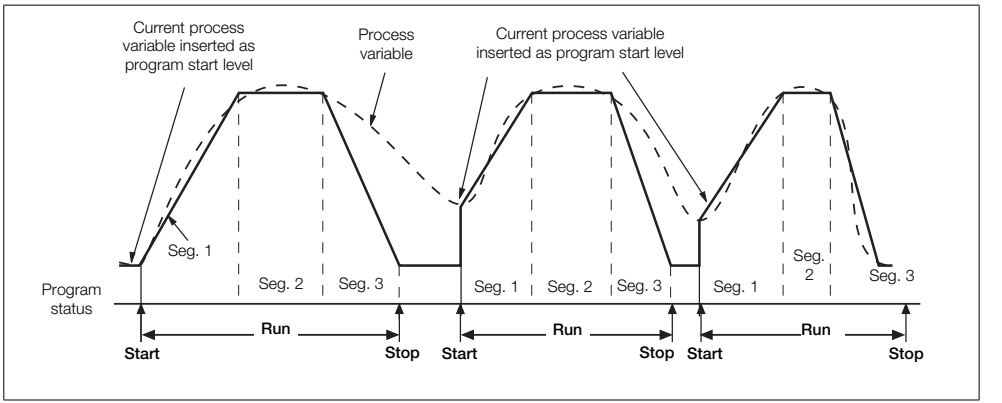

Fig. 7.3 Current PV

7.6.4 Profile Parameters

Common Settings	
SPT Start Condition	A start condition shall be specified for each control loop that determines the initial start setpoint of the program.
Program Setpoint	The program will start at the setpoint configured by *Setpoint Start* parameter.
Local Setpoint	The program will start from the current local setpoint value.
Current PV	The program will start from the current process variable value. Applies only if the first segment is a ramp.

...Profile Parameters / ...Common Settings

Ramp Control	
Ramp Type	Selects the Ramp Type required. The ramp type selected applies to all programs / segments. The profile set point can be configured to increment in one of two way: for a fixed period of time or for a number of engineering units per hour.
Rate	Defined as rate / time unit (hr, min, sec).
Time	Defined in hr:min:sec.
Ramp Units	Selects the ramp rate time units required (Units/min, Units/hr, Units/sec).
Program Control	
Run	Selects the digital source used to start the program. The program is started on the rising edge. 
Hold	Selects the digital source used to put the program into 'Operator hold' mode. Hold mode is entered on the rising edge. 

...Profile Parameters / ...Common Settings / ...Program Control

Reset	Selects the digital source used to reset a running program. The program is reset on a rising edge. If the program was running, it will run from the start. If the program was held it will remain held at the start point. 
Run / Hold	Selects the digital source used to start and hold the program. The program runs when the input is high and holds when the input is low. 
Stop	Selects the digital source used to stop the program. The program is stopped on the rising edge. 
Skip	Selects the digital source used to skip to the next segment. The segment is skipped on the rising edge. 
Repeat	Selects the digital source used to repeat the current segment. The segment is repeated on the rising edge. 

...Profile Parameters / ...Common Settings / ...Program Control

Recovery	
Action	Selects the profile restart action when power is restored after a failure or the PV is restored after a failure and the *Recovery Period* (*Time* – see below) has expired.
Continue	The program resumes from the point at which failure occurred and is placed in *Operator Hold* mode.
Repeat	The program resumes from the start of the current segment and is placed in *Operator Hold* mode.
Reset	The program resumes from the start of the current program and is placed in *Operator Hold* mode.
Advance	The program resumes at the point in the program that would have been reached if no power failure had occurred in *Run* mode. **Note**. If a zero time period is selected the program will always recover with the chosen option.
Time	Set the recovery time period used to determine the recovery action. The time is configurable in HH:MM:SS.

...Profile Parameters / ...Common Settings / ...Segment Options

Segment Options	
G'teed Ramp/ Soak	Enables the *Guaranteed Ramp/Soak* (*Holdback*) function. When enabled (*On*), the relevant configuration frames are displayed in *Program* / *Segment* menus to allow the *Guaranteed Ramp/ Soak* function to be configured.
Fast Run Mode	This frame enables a mode that allows the profile program to be run 8 times faster than the programmed times. In this mode guaranteed *Ramp* / *Soak* settings are ignored but wait conditions are not overridden.
Enter Program	
Name	Enter the *Program Name* (up to 16 characters) to be used to identify the running program in the *Operator Page* display.
Repeat Count	Enter the number of times the program is to be repeated.
None	The program will not be repeated (it will run once).
1 ... 10	The program repeats as defined, for example, if '1' is selected the program runs twice.
Continuous	The program runs continuously until stopped by the operator.

...Profile Parameters / ...Enter Program

Setpoint Start/End	
Start	The start setpoint value for the first segment of the program. **Note**. Available only if the *SPT Start Condition* parameter is set to *Program Setpoint*.
End	Defines the end condition of the program:
Local Setpoint	The program will enter the *Stop* state and switch to the currently selected *Local Setpoint*.
Hold Setpoint	The program remains active and in control at the setpoint defined by the last segment. It remains active until stopped, at which point the *Control Setpoint* switches to the current *Local Setpoint*.
Holdback Hysteresis	Hysteresis values are used to hold the program when the process value deviates from the setpoint by more than the hysteresis value as defined by the *Guaranteed Ramp* option for each segment. **Note**. Available only if *Guaranteed Ramp* is enabled.
Soak	Set the hysteresis value applied to *Soak* segments.
Ramp	Set the hysteresis value applied to *Ramp* segments.

...Profile Parameters / ...Enter Program

Enter Segments	
Segment No.	Enter the segment number to be configured.
Type	Select the segment type as described below:
Soak	Maintains the setpoint at a constant value for the duration of the segment. A soak segment requires the entry of the desired duration in hh:mm:ss. If the soak segment is the 1st segment in a program the setpoint value will be set as defined by the *SPT Start Condition* parameter. For other segments, the setpoint value will be derived from the end setpoint value of the previous segment.
Ramp Rate	Increases or decreases the setpoint at a linear rate until the desired value is reached. A *Ramp Rate* segment requires the user to enter the desired end setpoint and the desired ramp rate. The ramp rate is entered in engineering units per time period. The time period is defined by the *Ramp Rate Units* parameter (if *Ramp Type = Rate).*

...Profile Parameters / ...Enter Program / ...Enter Segments

Ramp Time	Increases or decreases the setpoint at a linear rate until the desired value is reached ((if *Ramp Type = Time)*. A *Ramp Time* segment requires the user to enter the desired end setpoint and the desired ramp duration in hh:mm:ss.
Step	Changes the setpoint value from the end value to of the previous segment to a new value. A *Step* segment requires the entry of the *Step* setpoint value.
End	Ends the program.
Period	Select the soak or ramp period of the segment in hhh:mm:ss. **Note**. Only displayed if *Segment Type* is configured as *Soak* or *Ramp* time.
Setpoint	Select the required end setpoint value for the segment in engineering units. **Note**. Only displayed if the *Segment Type* is configured as *Ramp Rate* or *Ramp Time*.
Ramp Rate	Select the required *Ramp Rate* for the segment. **Note**. Only displayed if *Segment Type* is *Ramp Rate*.

...Profile Parameters / ...Enter Program / ...Enter Segments

Guaranteed Ramp Guaranteed Soak	Select how the Guaranteed Ramp/Soak feature will be applied to the segment.
None	Guaranteed Ramp/Soak is disabled for the segment.
High	Guaranteed Ramp/Soak is applied above the setpoint.
Low	Guaranteed Ramp/soak applied below the setpoint.
High/Low	Guaranteed Ramp/Soak is applied above and below the setpoint.
	Note. Displayed only if *Guaranteed Ramp/Soak* is enabled in the *Segment Options* menu – see page 75 for detailed explanation.

7.7 Functions



Contains parameters for setting up the math block(s), logic equations and timer functions within the controller.

Logic Equations

Up to 8 logic equations can be configured. Each can combine up to 8 operands (digital signals) with 7 operators. The elements of each equation are calculated sequentially. Operand 1, Operator 1 and Operand 2 are evaluated first. The result is combined with Operator 2 and Operand 3. This result is then combined with the next operator and operand and so on to the end of the equation.

Note. If any of the operand sources are invalid (for example, an alarm that is not configured), the logic equation output state is zero and invalid.

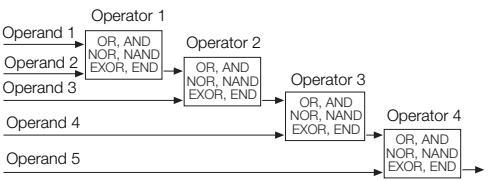

Key:

OR*	Output is 1 if either or both inputs are 1; output is 0 if both inputs are 0
AND	Output is 1 if both inputs are 1; output is 0 if either input is 0
NOR	Output is 0 if either or both inputs are 1; output is 1 if both inputs are 0
NAND	Output is 0 if both inputs are 1; output is 1 if either input is 0
EXOR	Output is 0 if both inputs are 0 or both inputs are 1; output is 1 if one input is 1 and the other is 0
END	Terminates the equation.

*2 Logic equations are required to perform an exclusive OR of 3 inputs

...Functions / Logic Equations

Equation Number	Selects the logic equation (1 to 8) to be configured.
Operand 1 (8)	See Appendix A, page 116 for description of sources.
Invert 1 (8)	Logically inverts (applies *NOT* function to) the digital signal. For example, if the digital signal assigned to the operand has a state of '1' it is inverted to a state of '0' before being applied to the equation.
Operator1 (7)	Selects the *Operator* type: *OR, AND, NOR, NAND, EXOR, END*. Select *END* if no more elements are required.
Math Blocks	Up to 8 math blocks can be configured. Each block can be configured as one of 6 different types (see *Block Type* below). The resulting analog value can be used as a source for other function blocks, for example, Process Variable in the control block – see *Custom Config*., page 38.
Math Block Number	The math block number (1 to 8).
Block Type	Selects the type of math block required.

...Functions / ...Math Blocks / ...Block Type

Equation

Enables an equation with up to 4 operands and 3 operators to be created. The operands can be assigned to any analog or digital signal (see Appendix A, page 116). Digital signals have value of either '0' or '1'. With the exception of the median operator, the equation is processed in a strict left to right order, with no operator precedence.

The result of a math block can be used as the operand in another math block, enabling more complex math equations to be constructed. The math blocks are processed in ascending order; math block 1 is processed first, then math block 2, then 3 to 8:

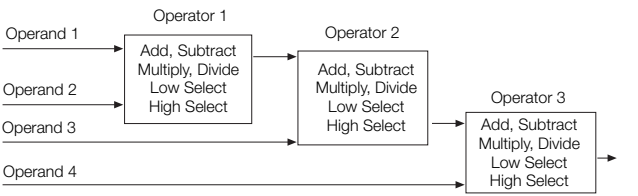

Multiple Operand Math Block Equation

...Functions / ...Math Blocks / ...Block Type

Real Time Average	Calculates the average value of a parameter over a user-configurable duration. The output of the math block is updated at the end of the configured duration only. A reset signal can be configured to restart the calculation of the average value. The average value is stored in case of power failure. If the duration of the power failure is longer than the *Average Duration* (see page 85), the math block output value is set to zero.
Max Hold	The math block output represents the highest value of the signal since it was reset.
Min Hold	The math block output represents the lowest value of the signal since it was reset.
Multiplexer	Enables 1 of 2 analog signals or constant values to be selected using a digital signal. 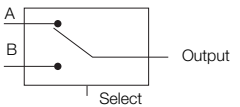 Select | 0 | 1 Output | A | B
Square Root	Calculates the square root of the selected sources value. If the input is less than 0, the output is set to zero and the math block output state set to invalid.

...Functions / ...Math Blocks

Equation Setup

Source 1 (2)	The source of the first operand in the equation (any analog or digital signal or user-defined constant).
Source 1(2) Constant	Sets the constant value to be used. **Note**. Applicable only if *Source 1 (2)* is assigned to one of the Constants.
Operator 1 (3)	
End	Terminates the equation.
Add *Subtract* *Multiply* *Divide*	Standard arithmetic functions.
Low Select	Result is the lower of the 2 operands.
High Select	Result is the higher of the 2 operands.
Median	If *Median* operators are used the median value calculated is dependent on the number of operands. The median value of 2 operands is their mean value. The median value of 3 operands is the value of the middle operand when the operands are sorted into ascending order. The median value of 4 operands is the mean value of the 2nd and 3rd operands when the 4 operands are sorted into ascending order.

...Functions / ...Math Blocks

Real Time Average Setup

Source 1 (RTA Source)	Selects the source for real time average calculation – see Appendix A, page 116 for description of sources.
Reset Source	Select the digital source required to reset the internal accumulative value and timer. This does not change the immediate output of the math block but restarts the calculation of the next average value – see Appendix A.1, page 116 for digital sources.
Average Duration	Sets the time duration the average is calculated over. The output value of the math block is updated at this rate.

Max Hold / MinHold Setup

Source 1	Selects the source for maximum or minimum value calculation – see Appendix A, page 116 for description of sources.
Reset Source	Select the digital signal to be used to reset the maximum or minimum value.

...Functions / ...Math Blocks

Multiplexer Setup

Source 1	Selects the source (any analog signal [see page 117] or user-defined constant) for the first input into the multiplexer.
Source 1 Constant	Sets the constant value to be used. **Note**. Applicable only if *Source 1* is assigned to one of the constants
Source 2	Select the source for the second input into the multiplexer.
Source 2 Constant	Sets the constant value to be used. **Note**. Applicable only if *Source 1* is assigned to one of the constants
Mux Selector	Select the digital signal to be used to switch between the 2 multiplexer inputs. '0' selects first input (*Mux A Src*); '1' selects second input (*Mux B Src*).

Square Root Setup

Source 1	Selects the source of the parameter that requires a square root to be applied – see page Appendix A, page 116 for description of sources.

...Functions / ...Math Blocks

Setup for ***All Math Block Types***

Eng. Dps	Selects the resolution required to be displayed for the math block result.
Eng. Low Eng High	Selects the engineering range low / high value for display and calculation of proportional band. If the math block result exceeds the *Eng High* or *Eng Low* value by more than 10%, the math block fail state is set and its output is determined by the *Fault Action* (see below).
Eng Units	The selected units are displayed in the operator pages – see Appendix C, page 122 for description of engineering units.
Fault Action	The value returned when the math block fails can be configured.
None	Failed calculated value is used as math block output.
Automatic	If the failed calculated output value is below zero the output is driven to its minimum value. If the failed calculated output value is above zero the output is driven to its maximum value.
Upscale	If the math block fails, its output is driven to its maximum value.
Downscale	If the math block fails, its output is driven to its minimum value.

...Function

Linearizer 1 (2)	A 20-breakpoint (custom) linearizer. Custom linearizers are applied by: 1. Selecting an analog source as the input to the linearizer. 2. Selecting the custom linearizer output as the source to be displayed. The engineering range and units of the input source are assigned to the custom linearizer output. 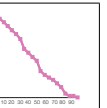
Source 1 (2)	Selects the input source to be linearized – see page Appendix A, page 116 for description of sources.
Lin 1 (2) Breakpoints	Set *X* and *Y* values as a % of the engineering range input source.
Breakpoint	Selects the breakpoint to be configured.
X	*X* is input to the linearizer expressed as a % of the electrical range.
Y	*Y* is output expressed as a % of the engineering range. Once configured, a custom linearizer must be soft-wired to an input or output using the custom template feature – see Section 7.1, page 36.

...Functions

Delay Timer 1 (2)	2 Delay timers are provided. The delay timer is triggered by the rising edge of its assigned source. An internal timer is started and, when the timer reaches the set *Delay Time*, its output goes high for the configured *On Time*. After the delay time is triggered it ignores any further transitions of the source input until the end of this delay timer cycle (the end of the *On Time*).
Source 1 (2)	The source signal used to trigger the delay timer. Trigger occurs on rising edge of the signal – see page Appendix A, page 116 for description of sources.
Delay Time	The delay (in seconds) between the trigger received and the output of the delay timer going high.
On Time	The length of time in seconds the delay timer output is held in the high state.
Real Time Alarms	2 Independent real-time alarms can be configured to activate on specific days and times for a set duration.
Real Time Alarm 1 (2)	Sets the day(s), month and time the alarm is activated, the alarm duration, alarm display enable in the diagnostics window and enables a (status bar) tag to be created for the alarm.
Monday (to Sunday)	
Month enable	When enabled (*On*), activates the alarm on the 1st day of each month.
Every hour	When enabled (*On*), activates the alarm every hour.

…Functions / …Real Time Alarms / …Real Time Alarm 1 (2)

On hour	Sets the hour the alarm is activated – not applicable if *Every Hour* (see page 89) is set to *On*.
On minute	Set the minutes past the hour the alarm is activated.
Duration	Set the duration the alarm is active.
Display enable	If disabled (*Off*), the alarm state does not appear in the operator level diagnostics window or the alarm log
Tag	A 16-character alphanumeric tag displayed as a diagnostic message that appears in the *Diagnostic Status Bar* and the *Diagnostic View* in the *Operator Level* – see Section 5, page 22.
Bank Control	Bank control functionality allows a bank of output devices such as pumps, heaters or fans to be scheduled *On* and *Off* under a duty / assist strategy. If required one of two different wear levelling schedules can be selected, rotate or *FIFO* (*First In First Out*). Up to 6 stages may be configured for bank control, each of which can be assigned to a relay or digital output. Each stage has an associated *On* trip value, *Off* trip value and *initial Output*. All stages included in a wear levelling schedule must use the same schedule type (*Rotate* or *FIFO*). The example (overleaf) illustrates how the two modes operate to achieve wear levelling of 3 pumps in a duty / assist strategy.

...Functions / ...Bank Control

...Bank Control

Using *First In First Out* (*FIFO*) and *Rotate* modes on a 3 pump system

First In First Out (FIFO)

	Level	P1	P2	P3		Level	P1	P2	P3
Seq. 1	1.3 m	×	×	×	Seq. 6	2.2 m	×	×	✓
Seq. 2	2.2 m	✓	×	×	Seq. 7	0.8 m	×	×	×
Seq. 3	3.6 m	✓	✓	×	Seq. 8	1.8 m	✓	×	×
Seq. 4	4.3 m	✓	✓	✓	Seq. 9	0.8 m	×	×	×
Seq. 5	2.8 m	×	✓	✓	Seq. 10	1.8 m	×	✓	×

Rotate Pump Cycling

	Level	P1	P2	P3		Level	P1	P2	P3
Seq. 1	1.3 m	×	×	×	Seq. 6	2.2 m	✓	×	×
Seq. 2	2.2 m	✓	×	×	Seq. 7	0.8 m	×	×	×
Seq. 3	3.6 m	✓	✓	×	Seq. 8	1.8 m	×	✓	×
Seq. 4	4.3 m	✓	✓	✓	Seq. 9	0.8 m	×	×	×
Seq. 5	2.8 m	✓	✓	×	Seq. 10	1.8 m	×	×	✓

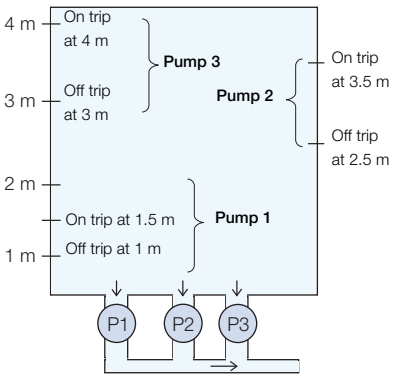

...Functions / ...Bank Control

Bank Size	Select the number of stages (pumps) required for the application from *2* to *6* or *Off*. *Off* disables the *Bank Control* functionality.
Control Source	Select the analog signal that will act as the control signal for the bank control. This is normally the Process Variable (PV) for most pump control applications.
Stage 1 (6)	
Off Trip	Select the *Control Source* value (PV) at which the output (pump) will be turned off.
On Trip	Select the *Control Source* value (PV) at which the output (pump) will be turned on.
Output	Select the initial output (relay or digital output) that the output is assigned to by default (for example, when *FIFO* or *Rotate* mode is not in operation.
Schedule	Select the wear levelling schedule required: *Off* – the output is not controlled by the bank schedule. The state of the output is entirely controlled by its associated trip points. *FIFO* – the output is controlled according to the *FIFO* schedule mode. *Rotate* – the output is controlled according to the *Rotate* schedule mode.

7.8 Communication



Used to setup communication parameters for the MODBUS / Ethernet communication protocols – see separate User Guide (IM/CM/C-EN).

Note. Only 1 communication option can be fitted per controller.

7.9 Diagnostics

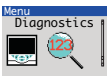

Used to view diagnostic data – see Section 7.9.1, page 96 for description of diagnostic messages and recommended corrective action(s).

Diagnostic history Displays a log of the diagnostic messages generated by the controller. Each diagnostic condition has a classification code conforming to NAMUR NE107.

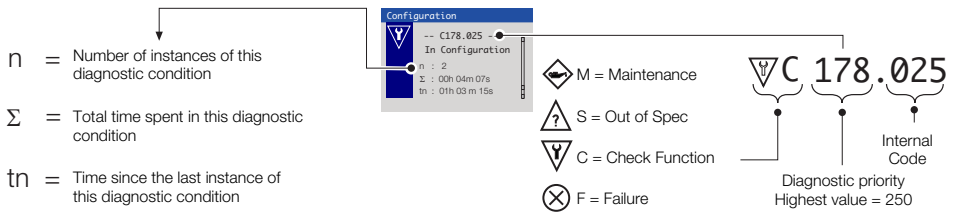

...Diagnostics

Source Analysis	
Analog Sources	Enables the current value of any analog source to be viewed.
Analog Source	Selects the analog signal to be viewed – see Section A.2, page 117.
View Value	Displays the value of the analog signal selected.
Digital Sources	Enables the current state of any digital source to be viewed.
Digital Source	Selects the digital signal to be viewed – see Section A.1, page 116.
View State	Displays the state of the digital signal selected.
Invalid Sources	Select edit to display any invalid analog or digital sources that are used in the configuration. Reasons for invalid sources include: ■ Hardware not fitted ■ Software not fitted ■ Digital I/O configured as wrong type ■ Alarms not configured ■ Math, logic, timer or custom linearizer not configured

7.9.1 Diagnostic Messages

Icon	Number / Message	Possible Cause	Suggested Action
⊗	242.004 ADC 1 Failed	Temporary or permanent failure of analog to digital converter on the main I/O board.	Cycle power to device. If problem persists replace main I/O board, contact local service organization.
⊗	240.005 ADC 2 Failed	Temporary or permanent failure of analog to digital converter on the option board.	Cycle power to device. If problem persists replace option board, contact local service organization.
⊗	250.000 (248.001) PV 1 (2) Failed	Problem with Input assigned to Loop 1 (2) PV. Broken sensor leads, defective input source or input signal out of permitted range.	Check wiring. Check input source. Check if input signal is outside permitted limits.
⊗	246.002 (244.003) RSP 1 (2) Failed	Problem with Input assigned to Loop 1 (2) Remote Setpoint. Broken sensor leads, defective input source or input signal out of permitted range.	Check wiring. Check input source. Check if input signal is outside permitted limits.
⊗	222.014 (220.015) CJ 1 (2) Failed	Error in Cold junction measurement associated with AIN1 (AIN3). Wiring fault or defective sensor.	Check cold junction device is correctly fitted. Ensure Analog I/P 2(4) is turned off. Replace CJ sensor.
⊗	226.012 (224.013) DV 1 (2) Failed	Problem with input assigned to Loop 1 (2) disturbance variable. Broken sensor leads, defective input source or input signal out of permitted range.	Check wiring. Check input source. Check if input signal is outside permitted limits

Table 7.1 Diagnostic Messages

Icon	Number / Message	Possible Cause	Suggested Action
⊗	230.010 (228.011) WV 1 (2) Failed	Problem with input assigned to Loop 1 (2) wild variable. Broken sensor leads, defective input source or input signal out of permitted range.	Check wiring. Check input source. Check if input signal is outside permitted limits
⊗	234.008 (232.009) PFB 1 (2) Failed	Problem with input assigned to Loop 1 (2) position feedback. Broken sensor leads, defective input source or input signal out of permitted range.	Check wiring. Check input source. Check if input signal is outside permitted limits
⊗	216.016 NV Error Proc Bd	Failure of non-volatile memory on processor / display board or permanent corruption of its data .	Check all configuration parameters and correct any errors. Acknowledge error. If problem persists contact local service organization.
⊗	214.017 NV Error Main Bd	Failure of non-volatile memory on main board or permanent corruption of its data.	Check calibration of AIN1, AIN2 and AO1. Recalibrate if necessary. Acknowledge error. If problem persists contact local service organization.
⊗	212.018 NV Error Opt Bd 1	Failure of non-volatile memory on option board 1 or permanent corruption of its data.	Check calibration of AO2, AIN 3 and AIN4 (CM50 only). Recalibrate If necessary. Acknowledge error. If problem persists contact local service organization.
⊗	210.019 NV Error Opt Bd 2	Failure of non-volatile memory on option board 2 or permanent corruption of its data.	Check calibration of AO2, AIN 3 and AIN4. Recalibrate If necessary. Acknowledge error. If problem persists contact local service organization.

Table 7.1 Diagnostic Messages (Continued)

Icon	Number / Message	Possible Cause	Suggested Action
⊗	208.020 NV Error Comm Bd	Failure of non-volatile memory on communications board or permanent corruption of its data.	Acknowledge error. Check communications board is correctly identified by device. If problem persists contact local service organization.
⊗	206.021 NV Error SW Key 1	Failure of non-volatile memory on Software key 1 or permanent corruption of its data.	Acknowledge error. Check software key functionality is enabled. If problem persists contact local service organization.
⊗	Config Error	The configuration contains a source that is no longer present or valid.	Check invalid sources in Diagnostics menu – see Section 7.9, page 94. Check configuration, check I/O required for configuration is present and correct any illegal use of the invalid signal by changing configuration or fitting additional option cards.
◈	054.044 (052.045) Tune Lp1 (2) Fail	Autotune has failed to complete its sequence or has calculated values outside of its permitted range.	Check process response. Consider if Autotune dynamic setting should be changed. Ensure process is stable and repeat autotune. If problem persists tune the loop manually.
◈	062.042 (058.043) Tune Lp1 (2) Noise	Autotune has failed due to excessive process or measurement noise.	Check input wiring. Ensure process is stable and repeat Autotune. If problem persists, tune the loop manually.

Table 7.1 Diagnostic Messages (Continued)

Icon	Number / Message	Possible Cause	Suggested Action
	070.040 (066.041) Tuner 1 (2) Abort	Autotune has been aborted by the user.	–
	094.034 (090.035) Valve 1 (2) Sticking	Motorized valve travel time is significantly slower than configured time.	Check valve to identify reason for sticking. Check correct travel time is entered in configuration.
	168.026 (166.027) (164.028) Tuner 1 Phase 1..3	Autotune is in progress. See page 29 for details of each phase.	Autotune can be aborted if required by selecting *Manual* control mode.
	160.030 (158.031) 156.032) Tuner 2 Phase 1..3	Autotune is in progress. See page 29 for details of each phase.	Autotune can be aborted if required by selecting *Manual* control mode.
	162.029 (154.033) Tuner 1 (2) Pass	Autotune has completed successfully and calculated new control parameters.	Acknowledge diagnostic
	178.025 In Configuration	The device is currently in the configuration mode.	This is for use with remote access via digital communications.

Table 7.1 Diagnostic Messages (Continued)

7.10 Device Info



Used to display read-only factory-set parameters for the controller.

Instrument Type	The controller's model number (for example, CM30).
I/O Build	The input / output (I/O) configuration.
No. Analog Inputs	The number of analog inputs available.
No. Analog Outputs	The number of analog outputs available.
No. Relays	The number of relays available.
No. Digital I/O	The number of digital inputs/outputs available.
Functionality	The current functional setting of the controller (for example, *Dual Loop*).
Serial No.	The factory serial number.
Hardware Revision	The controller's hardware version number.
Software Revision	The controller's software version number.

8 Templates and Functionality

Notes.

- Input assignments can be changed in Device Setup / Custom Config – see page 38.
- Output assignments can be changed in Input / Output configuration – see page 43.

8.1 Basic Templates

8.1.1 Single Loop / Single Loop with Remote Setpoint

This template provides basic feedback control using three term PID or On/Off control. The controller output is calculated from the difference between the process variable and the control setpoint. The control setpoint can be a fixed value entered by the user (Local setpoint) or an input from a remote source (remote setpoint).

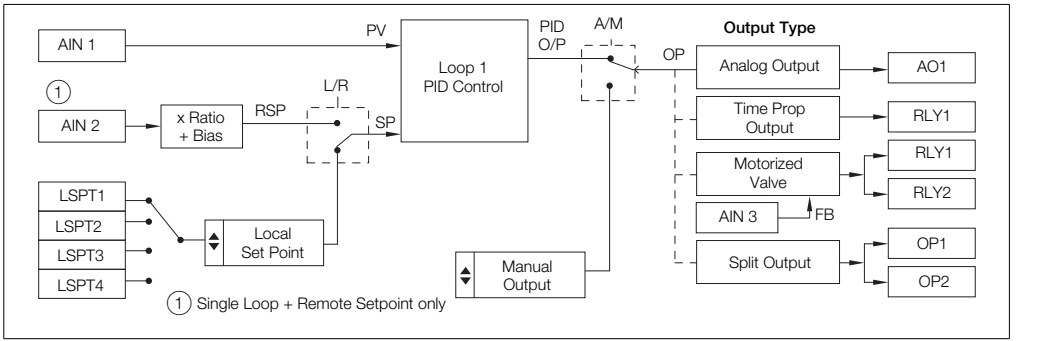

Fig. 8.1 Single Loop / Single Loop with Remote Setpoint Template

8.2 Standard Templates

8.2.1 Auto / Manual Station (Low Signal Selection / Digital Signal Selection)

This template configures the ControlMaster as a back up for a Master Controller (system). In normal operation the ControlMaster's current output follows the master controllers output value in Automatic mode.

Upon detection of a fault in the Master system, which is identified by either a low signal value on the Master Output or via a digital Input signal, the ControlMaster selects Manual Mode with either the last valid Master Output value or a pre configured fixed output value.

Once the Master signal is restored or the digital input state returns to its normal state the ControlMaster switches back to Auto Mode and continues to follow the Master Controller output.

(See Fig. 8.4, page 105 for details of parallel connection).

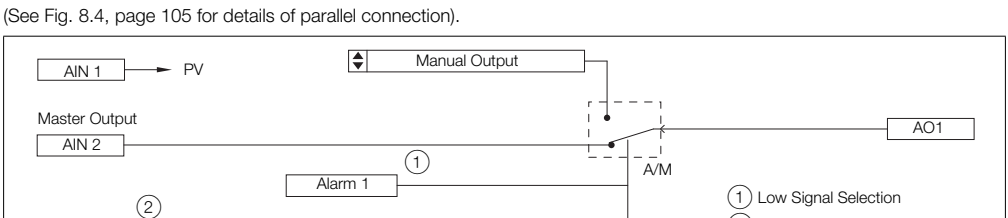

Fig. 8.2 Auto / Manual Station (Low Signal Selection / Digital Signal Selection) Template

8.2.2 Analog Backup Station (Low Signal Selection / Digital Signal Selection)

This template provides a back up for a master controller (system). In normal operating mode, the ControlMaster operates in Remote Control Mode. In this mode the output of the ControlMaster follows the Master controller's output. If a fault is detected in the Master system, either by a low signal on the Master output or by a digital input, the ControlMaster switches into Local Control Mode and the process is controlled by the PID output of the ControlMaster.

The PID algorithm continuously tracks the Master Controller output value to ensure a bumpless transfer from remote to local operation. Once the Master Controller output is restored or the digital Input returns to its normal state the ControlMaster switches back to Remote Control Mode and continues to track the master Controller.

(See Fig. 8.4, page 105 for details of parallel connection).

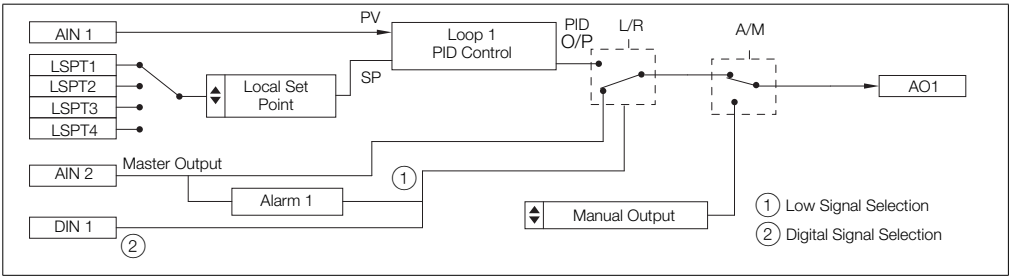

Fig. 8.3 Analog Backup Station (Low Signal Selection / Digital Signal Selection) Template

The auto-manual station and analog backup station templates can be used in series or in parallel with the master output signal. Parallel operation is achieved by using an external relay that is triggered by a relay on the ControlMaster, and selects the output to be routed to the process. This setup allows uninterrupted control, even in the event of failure of either the master controller or ControlMaster.

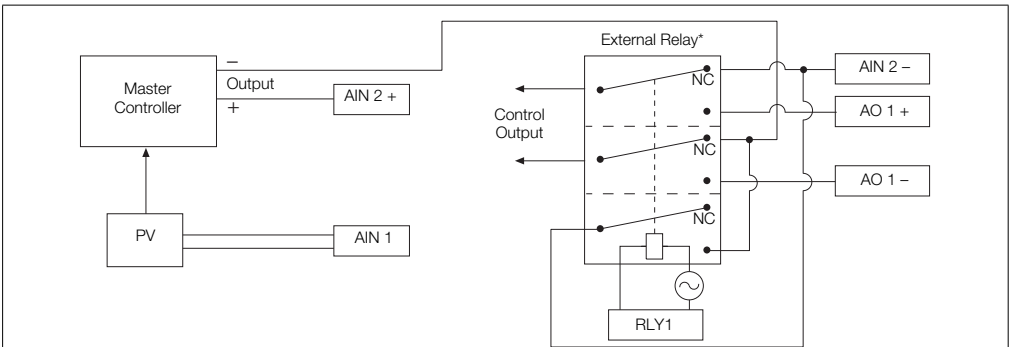

Fig. 8.4 Parallel Connection

8.2.3 Single Indicator

The Single Indicator template is used to display one variable on the digital display.

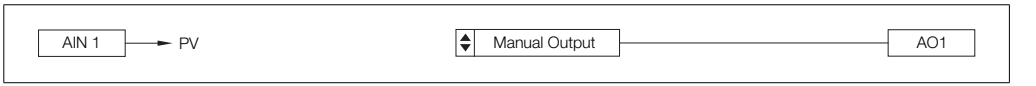

Fig. 8.5 Single Indicator Template

8.2.4 Dual Indicator

The Dual Indicator template is used to display two process variables on the digital display.

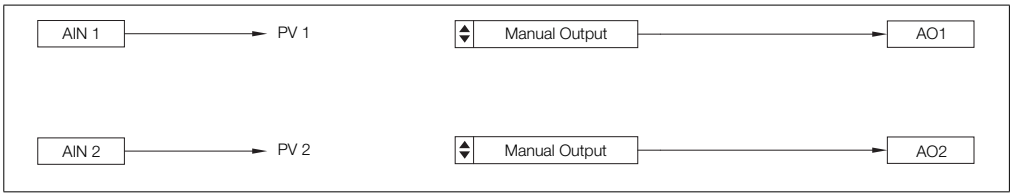

Fig. 8.6 Single Indicator Template

9 PC Configuration

In addition to local configuration via the front panel keys, the controller can be configured from a PC via the infrared port using the ConfigPilot PC configuration software. The controller's infrared port is activated when accessing the following page in the Advanced level:

Advanced>Device Setup>IrDA Configuration>Connect

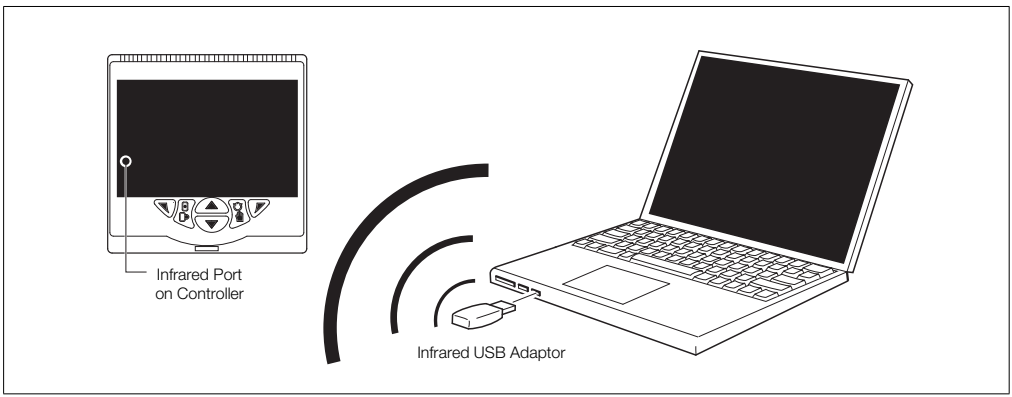

Fig. 9.1 PC Configuration via IrDA Service Port

10 Specification

Operation

Display

Color 1/4 VGA TFT, liquid crystal display (LCD) with built-in backlight

Language

English, German, French, Italian and Spanish

Operator keypad

CM10	4 tactile membrane keys
CM30 and CM50	6 tactile membrane keys

Security

Password protection

Basic / Advanced	User-assigned password protection (not set at factory)

Standard functions

Control strategies

Base templates	Single loop with local setpoint
	Single loop with remote setpoint
Standard templates	Auto/Manual station (low signal detection)
	Auto/Manual station (digital signal selection)
	Analog backup station (low signal detection)
	Analog backup station (digital signal detection)
	Single indicator / manual loader station
	Dual indicator / manual loader station

Control output types

Current proportioning

Time proportioning

On / Off

Motorized valve with feedback

Motorized valve without feedback

Split output – with combinations of relay, digital output and current outputs

Control parameters

Proportional band *	0.0 to 999.9 %
Integral *	0 to 10000 s
Derivative *	0.0 to 999.9 s
Manual Reset	0.0 to 100.0 %

Setpoints

Local	
CM10	2, selectable via digital inputs or front panel
CM30 / CM50	4, selectable via digital inputs or front panel
Remote	selectable via digital input or front panel keys

Autotune

On-demand calculation of control settings

Process alarms

Number	8
Types	High / Low process and High / Low latch
Source	Fully configurable (for example, PV, analog input, math block inbuilt, OP control loop deviation)
Hysteresis	Level and time
Alarm enable	Enable / disable of individual alarms via a digital signal

* 3 sets of PID parameters when used with Gain Scheduling facility

Acknowledgement

Via front panel keys or digital signals

Real-time alarms **

Number	2
Programmable	Time Day Duration

Bank control **

Number of outputs	6
Wear levelling	Rotate or FIFO

Math blocks **

Number	8
Operators	+, –, x , / Average, Maximum, Minimum High / Low / Median Select Square root Multiplexer

Delay timers **

Number	2
Programmable	Delay Duration

** Functionality level 'Standard' and above only

Logic equations *

Number	8
Elements	15 Per equation
Operators	OR, AND, NOR, NAND, NOT, EXOR

Custom linearizer *

Number	2
Elements	20 Breakpoints

Totalizer (CM30 and CM50 only) **

Number	2 (total) 9 digit totals
Type	Analog, digital, frequency or pulse
Statistical calculations	Average, maximum, minimum (for analog signals)
Update rate	125 ms

* Functionality level 'Standard' and above only

** Functionality level 'Extended' and above only

Analog inputs

Universal process inputs

CM10	1 standard
CM30 / CM50	2 (1 standard, 1 optional)
Type	Voltage Current Resistance (ohms) 3-Wire RTD Thermocouple Digital volt-free Digital 24 V Frequency Pulse

Non-universal process inputs

CM10	1 standard
CM30 / CM50	2 (1 standard, 1 optional)
Type	Voltage Current Thermocouple *** Digital volt-free Digital 24 V

Thermocouple types

B, E, J, K, L, N, R, S, T

Resistance thermometer

Pt100

*** Only if universal process input is configured as 'Thermocouple'

Other linearizations
$\sqrt{x}$, $x^{3/2}$, $x^{5/2}$

Digital filter
Programmable 0 to 60 s

Display range
–9999 to 99999

Update rate
125 ms

Common mode noise rejection
>120 dB at 50 / 60 Hz with 300 Ω imbalance resistance

Normal (series) mode noise rejection
>60 dB at 50 / 60 Hz

CJC rejection ratio
0.05 °C / °C change in ambient temperature

Temperature stability
0.02 % / °C or 2 µV / °C (1 µV / °F)

Long term (input) drift
<0.1 % of reading or 10 µV annually

Input impedance
>10 MΩ (millivolts input)
10 Ω (mA input)

Inputs

Thermocouple	Maximum Range °C (°F)	Accuracy (% of reading)
B#	–18 to 1800 (0 to 3270)	0.1 % or ±2 °C (3.6 °F) (above 200 °C [392 °F]) *
E	–100 to 900 (–140 to 1650)	0.1 % or ±0.5 °C (0.9 °F)
J	–100 to 900 (–140 to 1650)	0.1 % or ±0.5 °C (0.9 °F)
K	–100 to 1300 (–140 to 2350)	0.1 % or ±0.5 °C (0.9 °F)
L	–100 to 900 (–140 to 1650)	0.1 % or ±1.5 °C (2.7 °F)
N	–200 to 1300 (–325 to 2350)	0.1 % or ±0.5 °C (0.9 °F)
R#	–18 to 1700 (0 to 3000)	0.1 % or ±1 °C (1.8 °F) (above 300 °C [540 °F])
S#	–18 to 1700 (0 to 3000)	0.1 % or ±1 °C (1.8 °F) (above 200 °C [392 °F])
T#	–250 to 300 (–400 to 550)	0.1 % or ±0.5 °C (0.9 °F) (above –150 °C [–238 °F])

For B, R, S and T thermocouples, accuracy is not guaranteed below the value stated.

RTD	Maximum Range °C (°F)	Accuracy (% of reading)
Pt100	–200 to 600 (–325 to 1100)	0.1 % or ±0.5 °C (0.9 °F)

Linear Inputs	Standard Analog Input	Accuracy (% of reading)
Millivolts	0 to 150 mV	0.1 % or ±20 µV
Milliamps	0 to 45 mA (CM10 and CM30) 0 to 50 mA (CM50)	0.2 % or ±4 µA
Volts	0 to 25 V	0.2 % or ±20 mV
Resistance Ω (low)	0 to 550 Ω	0.2 % or ±0.1 Ω
Resistance Ω (high)	0 to 10 kΩ	0.5 % or ±10 Ω
Sample Interval	125 ms per sample	

Digital Inputs	
Type	**Volt-free or 24 V**
Minimum pulse duration	Analog inputs 1 and 2: ■ Single input configured – 250 ms ■ Both inputs configured as analog or digital – 500 ms Analog inputs 3 and 4 (not CM10): ■ Single inputs configured – 250 ms ■ Both inputs configured as analog or digital – 500 ms Consider analog inputs 1 / 2 and 3 / 4 independently

Frequency input*	
Frequency range	0 to 6000 Hz
1-signal	15 to 30 V
0-signal	–3 to 5 V

*For use with devices with open collector outputs

Outputs

Controls / retransmission outputs

Number	2 (1 standard, 1 optional)
Type	Configurable as analog or digital pulse
Isolation	Galvanically isolated from the rest of the circuitry, 500 V for 1 minute
Analog range	0 to 20 mA programmable
Load	750 Ω Max.
Accuracy	0.25 % of output or ± 10 µA

Relays

Number	CM10 / CM30: 4 (1 standard, 3 optional) CM50: 4 (2 standard, 2 optional)	
Type	CM10, CM30: Standard with changeover contacts. Optional contacts selectable as N/O or N/C (by jumper) CM50: Selectable as N/O or N/C (by jumper)	
Contact ratings		
CM10:	Relay 1:	5 A, 240 V
	Relays 2, 3, 4:	5 A, 240 V (max. ambient 40 °C (104 °F)
	Relays 2, 3, 4:	2 A, 240 V (max. ambient 55 °C (131 °F)
CM30, CM50:	5 A, 240 V	
Update rate	125 ms	

Digital input / output

CM10	2 (optional)
CM30 / CM50	6 (2 standard, 4 optional)
Type	User-programmable as input or output Minimum input pulse duration – 125 ms ■ Input – volt-free or 24 V DC – 1-signal: 15 to 30 V – 0-signal: –3 to 5 V – Conforms to IEC 61131-2 ■ Output – Open collector output – 30 V, 100 mA max. switched – Conforms to IEC 61131-2
Update rate	125 ms

2-Wire transmitter power supply

CM10	1 (standard)
CM30 / CM50	2 (1 standard, 1 optional)
Voltage	24 V DC
Drive	2 loops 45 mA max.

Communications

For MODBUS and Ethernet communications see separate User Guide (IM/CM/C–EN).

IrDA configuration port (standard)

Baud rate	up to 115 kBaud
Distance	up to 1 m (3 ft.)
Functions	Firmware upgrade configuration upload / download

EMC

Emissions & immunity

Meets requirements of IEC61326 for an Industrial Environment

Environmental

Operating temperature range

0 to 55 °C (32 to 131 °F)*

Operating humidity range

5 to 95 %RH (non-condensing)

Storage temperature range

–20 to 70 °C (–4 to 158 °F)

Enclosure sealing

Front face	IP66 / NEMA 4X
Rest of enclosure	IP20

*Restrictions may apply, refer to relay specification

Vibration

Conforms to EN60068-2-6

Altitude

2000 m (6562 ft.) max. above sea level

Safety

Approvals and certifications

EN61010-1

cULus

General safety

Pollution category 2

Insulation category 2

Isolation (to inputs)

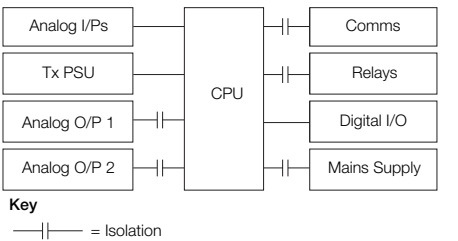

Electrical

Supply ranges

100 to 240 V AC ±10 % (90 V min. to 265 V max.) 50 / 60 Hz

10 to 36 V DC (optional)

Power consumption

10 W max.

Power interruption protection

No effect for interrupts of up to 60 ms

Physical

Size

CM10	50 x 97 x 141 mm (2.0 x 3.8 x 5.5 in.)
CM30	97 x 97 x 141 mm (3.8 x 3.8 x 5.5 in.)
CM50	144 x 76 x 146 mm (5.6 x 3.0 x 5.7 in.)

Weight

CM10	0.38 kg (0.84 lb) approx. (unpacked)
CM30	0.5 kg (1.1 lb) approx. (unpacked)
CM50	0.58 kg (1.3 lb) approx. (unpacked)

Panel cutout

CM10	45 x 92 mm (1.8 x 3.6 in.), 121 mm (4.8 in.) behind panel
CM30	92 x 92 mm (3.6 x 3.6 in.), 121 mm (4.8 in.) behind panel
CM50	138 x 68 mm (5.4 x 2.7 in.) 123 mm (4.9 in.) behind panel

Case material

Glass-filled polycarbonate

DS/CM10–EN Rev. P
DS/CM30–EN Rev. Q
DS/CM50–EN Rev. O

Appendix A – Digital and Analog Sources

Note. Numbers in brackets indicate additional parameters, for example, 'Alarm 1 (8) Ack. State indicates that 8 *Alarm Ack. State* parameters are available.

A.1 Digital Sources

Source Name	Description [Comment]
Alarm 1 (8) Ack. State	Acknowledged alarm = 0 Unacknowledged alarm = 1
Alarm 1 (8) State	Alarm State
Anlg IP 1 (4) Fail	Analog input failure (active when the signal detected at the analog input is outside the fault detect level specified during configuration).
AO1 (2) Loop Break	Analog output
Delay Timer 1 (2)	Delay timer state
IP 1 (4) Digital State	Input 1 (4) digital state
Linearizer 1 (2) Fail	Custom linearizer failure
Logic Equation 1 (8)	Logic equation result

Source Name	Description [Comment]
Loop 1 SP Mode	Setpoint mode selected 0 = Local, 1 = Remote
Loop 1 Auto Mode	Automatic control mode
Loop 1 Close Relay	Motorized valve close relay state
Loop 1 LSP 1 (4) State	Local setpoint state 1 = setpoint selected
Loop 1 Manual Mode	Manual control mode 1 = manual
Loop 1 Open Relay	Motorized valve open relay state
Loop 1 TP OP1	Time proportioning output
Loop 1 Valve State	Motorized valve state
Loop 1 Valve Stuck	Motorized valve stuck state

Source Name	Description [Comment]
Loop 1 Ctrl Track	Control track state
Math Block 1 (8) Fail	Maths failure
RTA 1 (2) State	Real time alarm state
Softkey Toggle	Front panel soft key toggles the source's state.
Softkey Edge	Front panel soft key sets the source active on key press.
T1 (2) Int Pulse	Totalizer intermediate pulse. Active for 1 second when the intermediate count is reached.
T1 (2) Run State	Totalizer run state 1 = totalizer running
T1 (2) Wrap Pulse	Totalizer wrap pulse If *Wrap Enable* is set to *On* – active for 1 second when the predetermined count is reached. If set to *Off* – active when the predetermined count has been reached and remains active until the totalizer is reset.

A.2 Analog Sources

Source Name	Description
Anlg IP 1 (4)	Analog input
Constant 1 (8)	Math block constant
Linearizer 1 (2)	Custom linearizer
Loop 1 Control OP	Control output value
Loop 1 Deviation	Loop 1 deviation
Loop 1 LSP	Local setpoint loop
Loop 1 PV	Loop 1 process variable
Loop 1 SP	Loop control setpoint
Loop 1 Split OP1	Loop 1 split output
Loop 1 Valve Pos	Motorized valve position
Loop Bias 1	Loop 1 desired bias
Math Block 1 (8)	Math block

Appendix B – Error Codes

B.1 Configuration Error Codes

Configuration errors are generated when a signal assigned as a source for something has failed.

Configuration errors are displayed as numerical codes and a description of each code is shown in the following tables:

Error Code	Error Description
1	Analog Input Value A1 (I/P 1)
2	Analog Input Value A2 (I/P 2)
3	Analog Input Value B1 (I/P 3 – CM50)
4	Analog Input Value B2 (I/P 4 – CM50)
5	Analog Input Value C1 (I/P 3 – CM30)
6	Analog Input Value C2 (I/P 4 – CM30)
9	Setpoint Selected LSPT Value 1
10	Setpoint Control Setpoint Value 1
11	Setpoint Selected Ratio Value 1
12	Setpoint Selected Bias Value 1
13	Setpoint Actual Ratio Value 1

Error Code	Error Description
14	Setpoint Selected LSPT Value 2
15	Setpoint Control Setpoint Value 2
16	Setpoint Selected Ratio Value 2
17	Setpoint Selected Bias Value 2
18	Setpoint Actual Ratio Value 2
19	Modbus Input Value 1
26	Maths Block Value 1
27	Maths Block Value 2
28	Maths Block Value 3
29	Maths Block Value 4
30	Maths Block Value 5
31	Maths Block Value 6

Error Code	Error Description
32	Maths Block Value 7
33	Maths Block Value 8
34	Maths Block Constant 1
35	Maths Block Constant 2
36	Maths Block Constant 3
37	Maths Block Constant 4
38	Maths Block Constant 5
39	Maths Block Constant 6
40	Maths Block Constant 7
41	Maths Block Constant 8
42	Control Output Value 1
43	Control Output Value 2
44	Dual Output Loop 1 Value 1
45	Dual Output Loop 1 Value 2
46	Dual Output Loop 2 Value 1

Error Code	Error Description
47	Dual Output Loop 2 Value 2
48	Mot Valve Output 1
49	Mot Valve Output 2
50	PV Maximum Value 1
51	PV Minimum Value 1
52	PV average Value 1
53	Volume Value 1
54	PV Maximum Value 2
55	PV Minimum Value 2
56	PV average Value 2
57	Volume Value 2
58	Customer Linearizer Value 1
59	Customer Linearizer Value 2
60	Profile User Value 1
61	Profile User Value 2
62	Mot Valve Position 1
63	Mot Valve Position 2
64	template Block PV Value 1
65	Template Block PV Value 2
66	Template Block Deviation Value 1

Error Code	Error Description
67	Template Block Deviation Value 2
70	Analog Input Fail State A1
71	Analog Input Fail State A2
72	Analog Input Fail State B1
73	Analog Input Fail State B2
74	Analog Input Fail State C1
75	Analog Input Fail State C2
76	Maths Block Fail State 1
77	Maths Block Fail State 2
78	Maths Block Fail State 3
79	Maths Block Fail State 4
80	Maths Block Fail State 5
81	Maths Block Fail State 6
82	Maths Block Fail State 7
83	Maths Block Fail State 8
84	Custom Linearizer Fail State 1
85	Custom Linearizer Fail State 2
94	Analog Input State A1 (I/P 1)
95	Analog Input State A2 (I/P 2)

Error Code	Error Description
96	Analog Input State B1 (I/P 3 – CM50)
97	Analog Input State B2 (I/P 4 – CM50)
98	Analog Input State C1 (I/P 3 – CM30)
99	Analog Input State C2 (I/P 4– CM30)
100	Setpoint Remote Mode State 1
101	Setpoint LSPT 1 Selected State 1
102	Setpoint LSPT 2 Selected State 1
103	Setpoint LSPT 3 Selected State 1
104	Setpoint LSPT 4 Selected State 1
105	Setpoint Remote Mode State 2
106	Setpoint LSPT 1 Selected State 2
107	Setpoint LSPT 2 Selected State 2

Error Code	Error Description
108	Setpoint LSPT 3 Selected State 2
109	Setpoint LSPT 4 Selected State 2
110	Digital Input State 1
111	Digital Input State 2
112	Digital Input State 3
113	Digital Input State 4
114	Digital Input State 5
115	Digital Input State 6
131	Logic Equation Result 1
132	Logic Equation Result 2
133	Logic Equation Result 3
134	Logic Equation Result 4
135	Logic Equation Result 5
136	Logic Equation Result 6
137	Logic Equation Result 7
138	Logic Equation Result 8
139	Real Time Alarm State 1
140	Real Time Alarm State 2
141	Alarm State 1

Error Code	Error Description
142	Alarm Ack State 1
143	Alarm State 2
144	Alarm Ack State 2
145	Alarm State 3
146	Alarm Ack State 3
147	Alarm State 4
148	Alarm Ack State 4
149	Alarm State 5
150	Alarm Ack State 5
151	Alarm State 6
152	Alarm Ack State 6
153	Alarm State 7
154	Alarm Ack State 7
155	Alarm State 8
156	Alarm Ack State 8
157	Time Prop State 1
158	Time Prop State 2
159	Time Prop State 3
160	Time Prop State 4
161	Control O/P Auto State 1

Error Code	Error Description
162	Control O/P Manual State 1
163	Control O/P Track Status 1
164	Control O/P Auto State 2
165	Control O/P Manual State 2
166	Control O/P Track Status 2
167	Analog O/P Loop break A1
168	Analog O/P Loop break B1
169	Mot Valve Close Relay State 1
170	Mot Valve Open Relay State 1
171	Mot Valve Sticking State 1
172	Mot Valve Tri State 1
173	Mot Valve Tri State 2
174	Mot Valve Close Relay State 2
175	Mot Valve Open Relay State 2
176	Mot Valve Sticking State 2
177	Delay Timer State 1
178	Delay Timer State 2
189	Toggle Signal
190	Edge Signal

B.2 Profile Error Codes

Error Code	Error Description
1	*Jump Target Invalid* Current active program is configured to jump to another program, upon the completion of this action it is found that the next program has been configured incorrectly.
2	*Retort Rampback Invalid* Retort Rampback value is a negative number and must be changed.
3	*Retort Previous Invalid* There is no previous segment therefore the program is unable to jump back to the last ramp rate.
4	*PV Invalid* The Process Variable has failed.

Error Code	Error Description
5	*Local Setpoint has Failed* The Local setpoint has become invalid. This may be that it has travelled outside of its permissible limits.
9	*Validation* The current program is configured incorrectly and therefore judged invalid by the software validation.

Appendix C – Analog Input (Engineering) Units

Unit	Description
%	%
% sat	% saturation
%dO2	% dissolved oxygen
%HCl	% hydrochloric acid
%N2	% nitrogen
%O2	% oxygen
%OBS	% obscuration
%RH	% relative humidity
A	amps
bar	bar
CUMEC	cubic metre per second
deg C / F	degrees Celsius / Fahrenheit
Feet	imperial feet
ft^3/d, ft^3/h, ft^3/m, ft^3/s	cubic feet per day, hour, minute, second.

Unit	Description
FTU	formazine turbidity units
g/d, g/h, g/l	grams per day, hour, liter
gal/d (UK)	imperial gallons per day
gal/d (US)	US gallons per day
gal/h (UK) / (US)	imperial / US gallons per hour
gal/m, s (UK) / (US)	imperial / US gallons per minute, second.
Hz	hertz
Inches	imperial inches
Kelvin	degrees Kelvin
kg/d, kg/h, kg/m	kilograms per day, hour, minute.
kg/s	kilograms per second
kHz	kilohertz
l/d, l/h, l/m, l/s	liters per day, hour, minute, second.
lb/d, lb/h, lb/m, lb/s	pounds per day, hour, minute, second.

Unit	Description
m WG	meters water gauge
m^3/d, m^3/h, m^3/m, m^3/s	cubic meters per day, hour, minute, second.
mbar	millibar
mg/kg	milligrams per kilogram
Mgal/d (UK)	imperial mega gallons per day
Mgal/d (US)	US mega gallons per day
mho	conductance
Ml/d, Ml/h	megaliters per day, hour.
ml/h, ml/m	milliliters per hour., minute.
Ml/s	megaliters per second
mS/cm, mS/m	milliSiemens per centimeter, meter
mV	millivolts
MV	megavolts

Unit	Description
NTU	nephelometric turbidity units
pb	parts per billion
pH	potential Hydrogen
pm	parts per million
psi	pounds per square inch
S	Siemens
SCFM	standard cubic feet per minute
T/d, T/h, T/m	metric tonnes per day, hour, minute.
T/s	metric tonnes per sec.
ton/d, ton/h, ton/m, ton/s	imperial tons per day, hour, minute, second.
ug/kg	micrograms per kilogram
uS/cm, uS/m	microSiemens per centimeter / meter
uV	microvolts

Appendix D – Output Type Assignments

Output Type	AO 1	AO 2	DIO 1	DIO 2	RLY1	RLY2	RLY3	RLY4
Analog	OP	PV			ALM 1	ALM 2	ALM 3	ALM 4
Time Proportioning	PV	SP			OP	ALM 1	ALM 2	ALM 3
MValve + Feedback	PV	SP			Open V	Close V	ALM 1	ALM 2
MValve Boundless	PV	SP	OP 2		Open V	Close V	ALM 1	ALM 2
Split Output Analog / Relay	OP 1	PV			OP 2	ALM 1	ALM 2	ALM 3
Split Output Analog / Digital	OP 1	PV	OP 2		ALM 1	ALM 2	ALM 3	ALM 4
Split Output Relay / Relay	PV	SP			OP 1	OP 2	ALM 1	ALM 2
Split Output Relay / Digital	PV	SP	OP 2		OP 1	ALM 1	ALM 2	ALM 3
Split Output Digital / Relay	PV	SP	OP 1		OP 2	ALM 1	ALM 2	ALM 3
Split Output Digital / Digital	PV	SP	OP 1	OP 2	ALM 1	ALM 2	ALM 3	ALM 4
Split Output Analog / Analog	OP 1	OP 2			ALM 1	ALM 2	ALM 3	ALM 4

Refer to Section 7.5, page 63

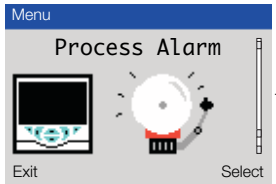

- Alarm 1 (8)
  - Type
  - Tag
  - Source
  - Trip
  - Hysteresis
  - Time Hysteresis
  - Display Enable
- Acknowledge Source
- Enable Source

Refer to Section 7.6, page 66

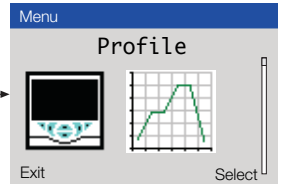

- Common Settings
  - SPT Start Condition
  - Ramp Control
  - Program Control
  - Recovery
  - Segment Options
  - Fast Run Mode
- Enter Program
  - Program No
  - Name
  - Repeat Count
  - Setpoint Start/End
  - Holdback Hysteresis
  - Enter Segments
  - Guaranteed Ramp/soak

Refer to Section 7.7, page 80

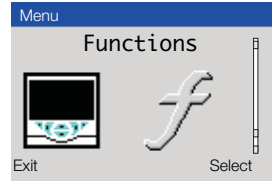

- Logic Equations
  - Equation Number
  - Operand 1 (8)
  - Invert 1 (8)
  - Operator 1 (7)
- Math Blocks
  - Math Block Number
  - Block Type
  - Eng. DPs
  - Eng. Low
  - Eng. High
  - Eng. Units
  - Fault Action
  - Source 1 (2)
  - Source 1 (2) Constant
  - Reset Source
  - Average Duration
  - Operator 1 (3)
  - Mux Selector
- Linearizer 1 (2)
  - Source 1 (2)
  - Lin 1 (2) Breakpoints
- Delay Timer 1 (2)
  - Source
  - Delay Time
  - On Time
- Real Time Alarms
  - Real Time Alarm 1 (2)
- Bank Control
  - Bank Size
  - Control Source
  - Bank 1 (6)

Refer to Section 7.8, page 93

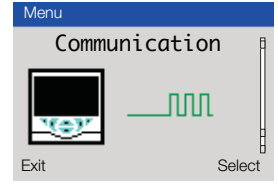

Refer to IM/CM/C-EN for details of Communication parameters.

Refer to Section 7.9, page 94

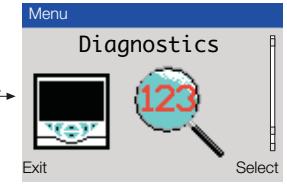

- Diagnostic History
- Source Analysis
  - Analog Source
  - Digital Source
  - Invalid Sources

Refer to Section 7.10, page 100

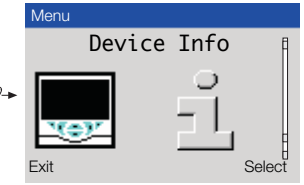

- Instrument Type
- I/O Build
- No. Analog Inputs
- No. Analog Outputs
- No. Relays
- No. Digital I/O
- Functionality
- Serial No.
- Hardware Revision
- Software Revision

Sales



Service



Software



ABB Measurement & Analytics

For your local ABB contact, visit:
www.abb.com/contacts

For more product information, visit:

www.abb.com/measurement

We reserve the right to make technical changes or modify the contents of this document without prior notice. With regard to purchase orders, the agreed particulars shall prevail. ABB does not accept any responsibility whatsoever for potential errors or possible lack of information in this document.

We reserve all rights in this document and in the subject matter and illustrations contained therein. Any reproduction, disclosure to third parties or utilization of its contents – in whole or in parts – is forbidden without prior written consent of ABB.
© ABB 2021

IM/CM/S-EN Rev. U 07.2021