Electronic Audible Signal Devices / Electronic Buzzers Installation 109

Electr. Buzzer EM Contin. tone 115VAC/DC



Part No.: 109.000.77

MECHANICAL DATA	
Height	59 mm
Diameter	52 mm
Materials	PC PC/ABS
Housing colour	Black
Protection category	IP65
Connection	Screw terminals
cross-sectional area maximum	1,50mm² / 16AWG
Type of fixing	Built-in mounting
Working temperature minimum	-20°C
Working temperature maximum	+50°C
Weight with packaging	61 g
Product weight	47 g

ELECTRICAL DATA	
Operating voltage	115V
Operating voltage type	AC/DC
Operating voltage frequency	60Hz
Operating voltage tolerance	+/- 10%
Rated operational voltage	115 VAC
Rated operational current	25 mA
Rated inrush current	<500mA
Protection class	Protection class 2
Pollution degree	3 In the connection area: 2
Overvoltage category	II
Isolation voltage	Ui = 250V; Uimp = 2.500V

ACUSTICAL DATA	
Volume (max) at 1m distance	80,0 dB (A)
Acoustic signal image	Continuous tone
Audio frequency	2100 Hz
Acoustic service life	5,000 h minimum

APPROVAL DATA	
Conforms with CE	Yes
WEEE	Yes
Conform with ATEX-directive	No
Conforms with CCC	No
Conforms with UL	cULus

! For additional installation and mounting information, refer to the appropriate user guide at www.werma.com. This printed copy is for information only and is subject to alteration.

Electronic Audible Signal Devices / Electronic Buzzers Installation 109

Electr. Buzzer EM Contin. tone 115VAC/DC

UL Type Rating	Type 4X
Conforms with FCC	No
Conforms with IC	No
EAC certificate available	Yes
Conforms with UKCA (Importer)	Yes (WERMA (UK) Ltd.)
Conforms with AS-I	No
ICAO Certification	No
Conforms with GL	No
Conforms with RoHS CN	No
Conforms with VdS	No

DRAWING

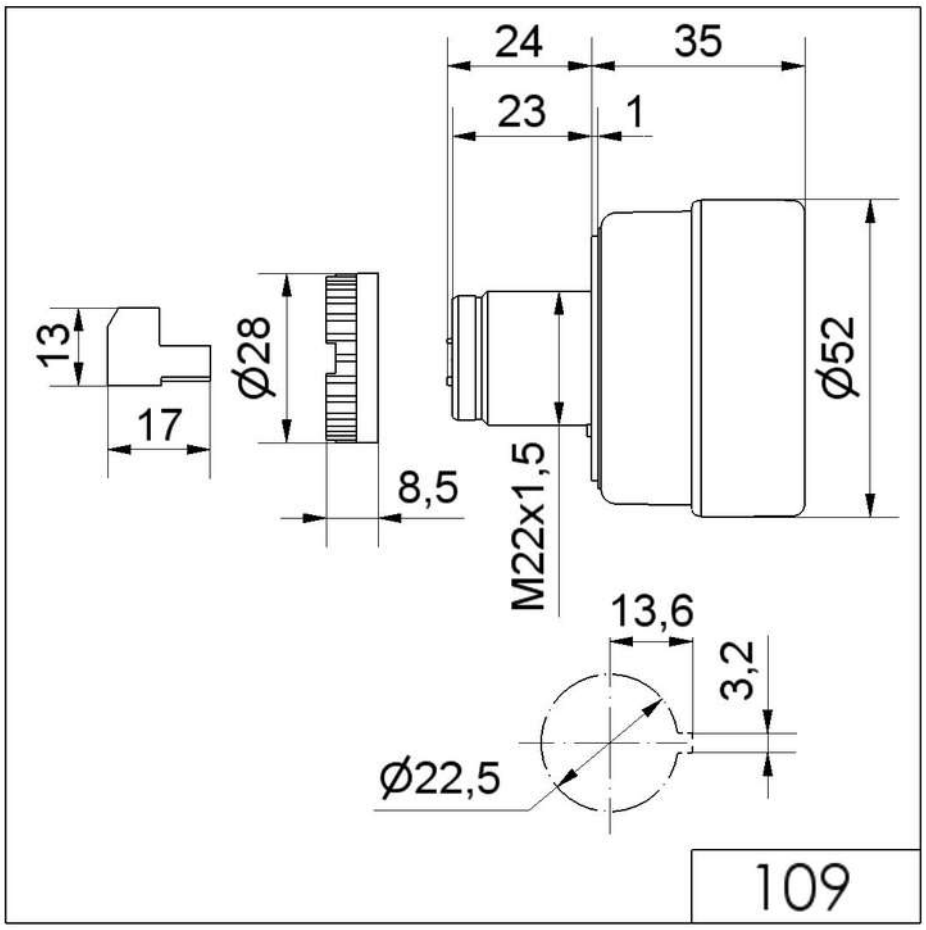

! For additional installation and mounting information, refer to the appropriate user guide at www.werma.com. This printed copy is for information only and is subject to alteration.