Bourdon Tube, Pressure Gauges Industry Series
Type 212.20
Item no.: 45705373

Description	
Design	EN 837-1
Nominal size	100 mm
Accuracy class	class 1.0
Scale range	0...1000 bar
Unit of outer Scale	bar
Process connection	G 1/2 B
Connector location	lower mount
Materials	
Movement	Copper alloy
Dial	Aluminum, white
Pointer	standard pointer
Case material	Stainless steel
Window	flat instrument glass
Bezel ring	cam ring (bayonet type), stainless steel
Case filling fluid	no filling, not to fill
Operating conditions	
Permissible ambient temperature	-40 ... +60 °C
Ingress protection	IP 54

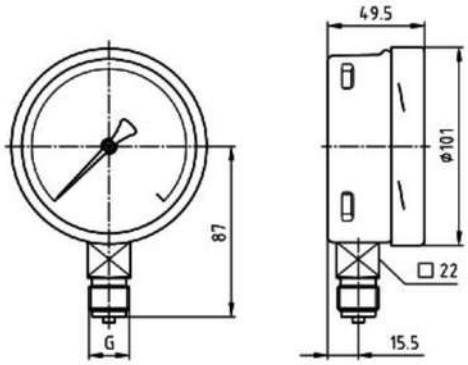

WIKA Instruments – 38 Avenue du Gros Chêne – 95220 HERBLAY
Phone0 820 95 10 10
info_fr@wika.com • http://www.wika.fr