MANUALLY OPERATED PILOT VALVE

for panel mounting Ø 22
instant fittings for Ø 4 mm O.D. tube or G 1/8

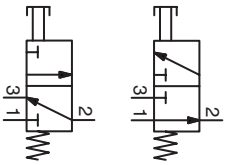

3/2
Series
307



FEATURES

- *Microvalve composed of an operating head, an adaptor, an intermediary subbase and one or two pneumatic modules.*
- *Modules allowing the following combination of functions:*

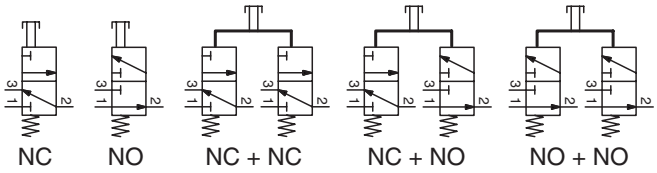

- *Adaption of metal or plastic buttons designed to meet the highest quality standards.*
- *Secure and robust fastening of the button on the microvalve.*

GENERAL

Fluid	Air filtered, lubricated or no
Ports	Instant fittings Ø 4 O.D. or G 1/8
Operating pressure	0 to 8 bar
Ambient temperature	-5°C to +60°C
Operators	Manual
Flow (Qv at 6 bar)	112 l/min (ANR)
Nominal diameter	2 mm

CONSTRUCTION

Popet valve construction	Internal parts in stainless steel and elastomer
Body diecast	Exhaust port not tapped

SPECIFICATIONS - METAL operating head and adaptator

			pilot valve	operating head	adaptator		intermediary subbase + pneumatic(s) module(s)				
			 or  =		+ 	+	 or 				
	designation	**type**	**color**	**cat. number**	**cat. number**		**connect.**	**cat. number**		**cat. number**	
	flush push button	impulse	black	**88130757**	**88130754**	+					
			green	**88130758**							
			red	**88130759**							
	mushroom* button Ø 40	push-turn	red	**88130770**							
		push-pull	red	**88130752**							
		impulse	red	**88130762**							
			black	**88130763**							
	Ø 60	impulse	black	**88130772**							
	switch button	2 positions fixed	black	**88130771**			Ø 4 mm O.D.	NC	**30701009**	NC+NC	**30701011**
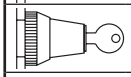	key operated button	key removal at 0 and 1	black	**88130761**				NO	**30701010**	NC+NO	**30701012**
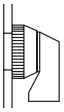	lever switch button	2 positions fixed 0 1	black	**88130760**			G1/8	NC	**30701013**	NC+NC	**30701015**
		3 positions fixed 1 0 2	black	**88130767**				NO	**30701014**	NC+NO	**30701016**
		3 positions self centring 1 0 2	black	**88130766**							

*These componants are not security mechanism

Order example :
1 pilot valve, instant fittings ports, with impulse black flush push button, NC :
1x **88130757** + *1x* **88130754** + *1x* **30701009**

00400GB-2017/R01
Availability, design and specifications are subject to change without notice. All rights reserved.

SPECIFICATIONS - PLASTIC operating head and adaptator

	pilot valve	operating head	adaptator		intermediary subbase + pneumatic module(s)
	 or 	= 	+ 	+	 or 

designation	type	color	cat. number	cat. number		connect.	cat. number		cat. number
 flush push button	impulse	black	**88130745**	**88130753**	+				
		green	**88130744**						
		red	**88130743**						
 mushroom* button Ø 40	push-turn	red	**88130740**						
	impulse	red	**88130741**			Ø 4 mm O.D.	NC	**30701009**	NC+NC	**30701011**
		black	**88130742**						
Ø 60	impulse	black	**88130748**						
 switch button	2 positions fixed	black	**88130739**				NO	**30701010**	NC+NO	**30701012**
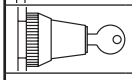 key operated button	key removal at 0 and 1	black	**88130738**			G1/8	NC	**30701013**	NC+NC	**30701015**
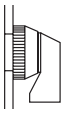 lever switch button	2 positions fixed 	black	**88130737**				NO	**30701014**	NC+NO	**30701016**
	3 positions fixed 	black	**88130736**							
	3 positions self centring 	black	**88130735**							

*These componants are not security mechanism

Order example:
1 pilot valve, connection G 1/8, with impulse red flush push button, NC+NC :
1x **88130743** + *1x* **88130753** + *1x* **30701015**

OPERATION OF 3 POSITION SWITCHES

type		operation on module left	operation on module right
3 positions fixed		not operated	not operated
		not operated	operated
		operated	not operated
3 positions self centring		not operated	not operated
		not operated	operated
		operated	not operated

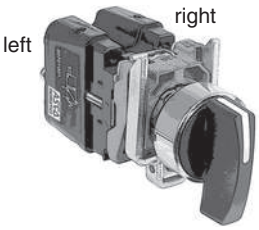

SEPARATED PNEUMATIC MODULES

connection	function	cat. number
instant fittings Ø 4 mm O.D.	NC	**30701001**
	NO	**30701002**
tapped G 1/8	NC	**30701005**
	NO	**30701006**

INTERMEDIARY SUBBASE

	cat. number
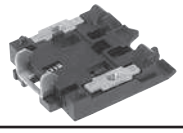	**88130775**

00400GB-2017/R01
Availability, design and specifications are subject to change without notice. All rights reserved.

DIMENSIONS

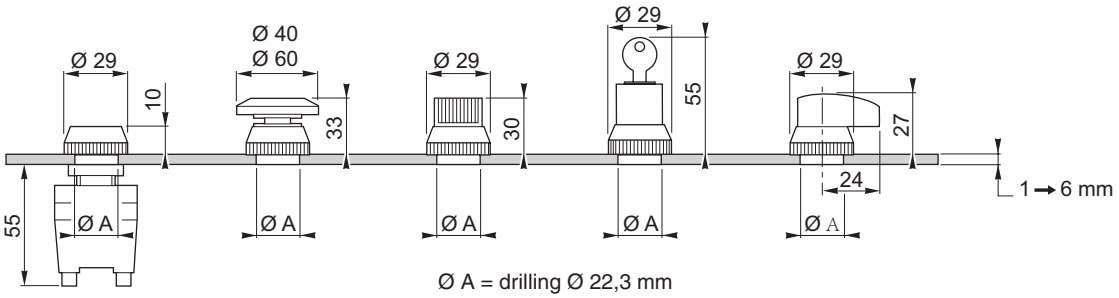

PANEL DRILLING

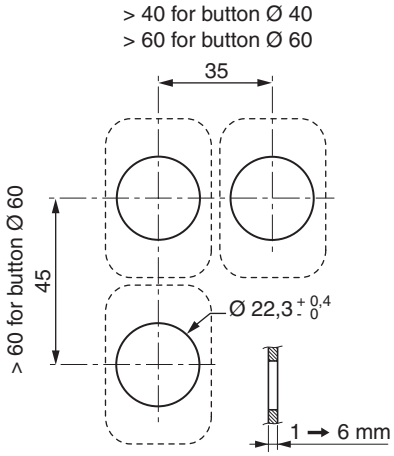

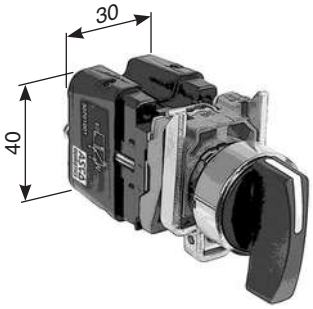

REDUCING ADAPTER
Ø 30 → Ø 22 mm

	cat. number
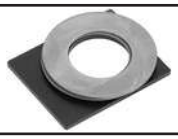	88130755

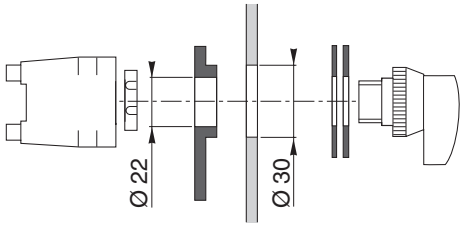

MOUNTING

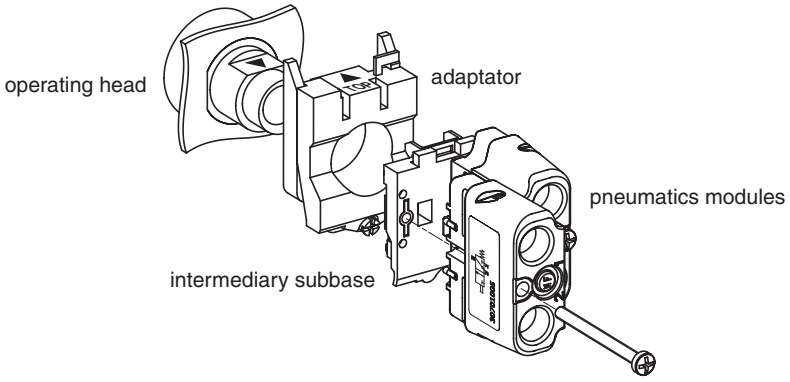

metal operating head

❶❷❸ mounting

④⑤⑥ dismantling

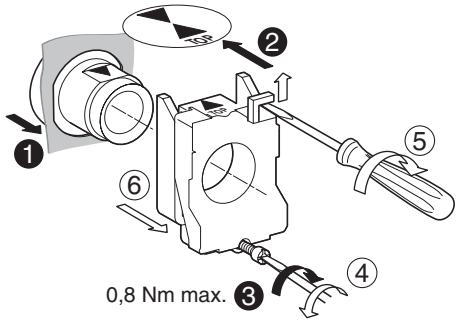

plastic operating head

❶❷❸ mounting

④⑤ dismantling

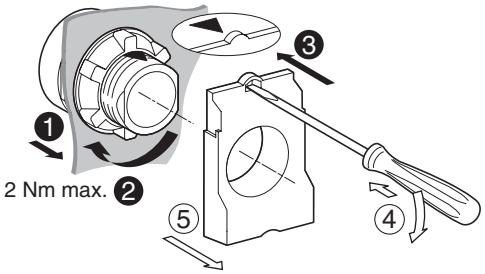

00400GB-2017/R01
Availability, design and specifications are subject to change without notice. All rights reserved.

00400GB-2017/R01
Availability, design and specifications are subject to change without notice. All rights reserved.