metal sleeve



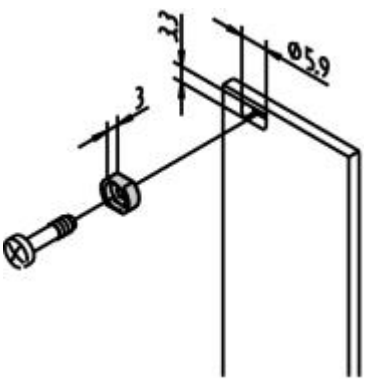

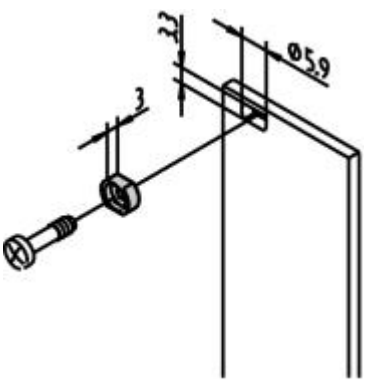

Product illustrations are exemplary illustrations and can deviate from supplied products.

Part no.: 21100-659

Features:

- For mounting partial width front panels

Technical Information:

Description	Qty/PU
Metal sleeve, brass, nickel-plated	10 piece

Note:

- Metal sleeves on the partial front panels must be pressed in.