Product datasheet

Specifications



inductive sensor XS9 M30 - L64mm - full SS 316L - Sn40 mm - 12..24VDC - M12

XS930S4PAM12

Main

Range of product	Telemecanique Inductive proximity sensors XS
Series name	Application
Sensor type	Inductive proximity sensor
Device application	Food and beverage
Market segment	Pharmaceutical
Sensor name	XS9
Sensor design	Cylindrical M30
Size	64 mm
Body type	Single piece body
Enclosure material	Stainless steel 316L
Type of output signal	Discrete
Wiring technique	3-wire
[Sn] nominal sensing distance	40 mm
Discrete output function	1 NO
Discrete output type	PNP
Electrical connection	Male connector M12, 4 pins
[Us] rated supply voltage	12...24 V DC with reverse polarity protection
Switching capacity in mA	<= 200 mA with overload and short-circuit protection
IP degree of protection	IP68 conforming to IEC 60529 IP69K

Complementary

Thread type	M30 x 1.5
Detection face	Frontal
Detector flush mounting acceptance	Non flush mountable
Material	Stainless steel 316L
Front material	Stainless steel 316L
Sensing range	> 15...40 mm
Operating zone	0…32 mm

Disclaimer: This documentation is not intended as a substitute for and is not to be used for determining suitability or reliability of these products for specific user applications

Differential travel	1...15 % of Sr
Repeat accuracy	<= 5 % of Sr
Output circuit type	DC
Status LED	Output state: 1 LED (yellow)
Supply voltage limits	10…30 V DC
Maximum residual current	0.1 mA open state
Switching frequency	<= 90 Hz
Maximum voltage drop	<2 V (closed)
Current consumption	<= 10 mA no-load
Maximum delay first up	40 ms
Maximum delay response	0.00006 ms
Maximum delay recovery	0.015 ms
Marking	CE
Threaded length	32 mm
Height	30 mm
Length	64 mm
Net weight	0.145 kg

Environment

Product certifications	Ecolab cULus
Ambient air temperature for operation	-25…85 °C
Ambient air temperature for storage	-25…85 °C
Vibration resistance	25 gn amplitude = +/- 1 mm (f = 10…55 Hz) conforming to IEC 60068-2-6
Shock resistance	30 gn for 11 ms conforming to IEC 60068-2-27

Packing Units

Unit Type of Package 1	PCE
Number of Units in Package 1	1
Package 1 Weight	148.0 g
Package 1 Height	4.5 cm
Package 1 width	6 cm
Package 1 Length	14 cm
Unit Type of Package 2	S01
Number of Units in Package 2	25
Package 2 Weight	3.873 kg
Package 2 Height	15 cm
Package 2 width	15 cm
Package 2 Length	40 cm

Offer Sustainability

REACh Regulation	REACh Declaration
EU RoHS Directive	Pro-active compliance (Product out of EU RoHS legal scope) EU RoHS Declaration

Mercury free	Yes
RoHS exemption information	Yes

Contractual warranty

Warranty	18 months

Product datasheet XS930S4PAM12

Dimensions Drawings

Dimensions

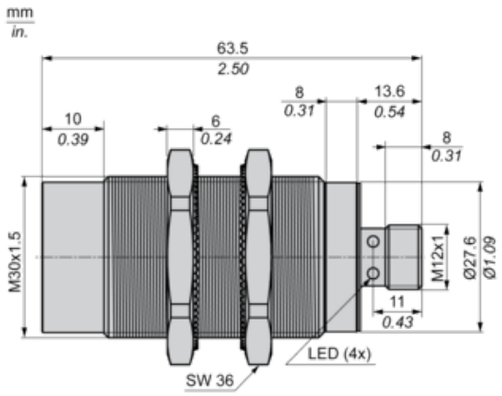

Product datasheet XS930S4PAM12

Mounting and Clearance

Minimum Mounting Distances in mm

Side by side

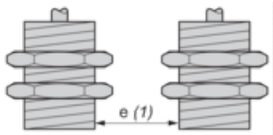

e (1) ≥ 270 mm/10.63 in.

Face to face

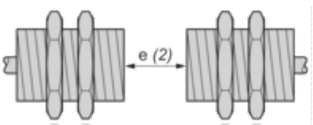

e (2) ≥ 130 mm/5.12 in.

Facing a metal object

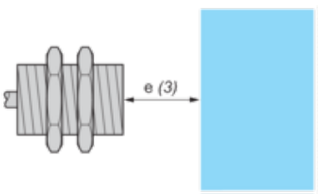

e (3) ≥ 120 mm/4.72 in.

Mounted in a metal support

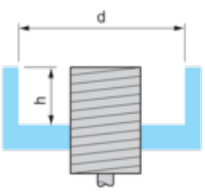

d ≥ 120 mm/4.72 in.

h ≥ 34 mm/1.34 in.

Product datasheet XS930S4PAM12

Connections and Schema

Wiring Schemes

M12 connector



PNP

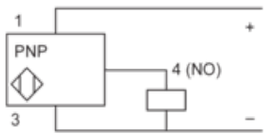

1 : (+)

2 : Not connected

3 : (-)

4 : NO Output