PI003A

Pressure sensor with display

PI-025-REA01-MFRKG/US/3D/3G /P

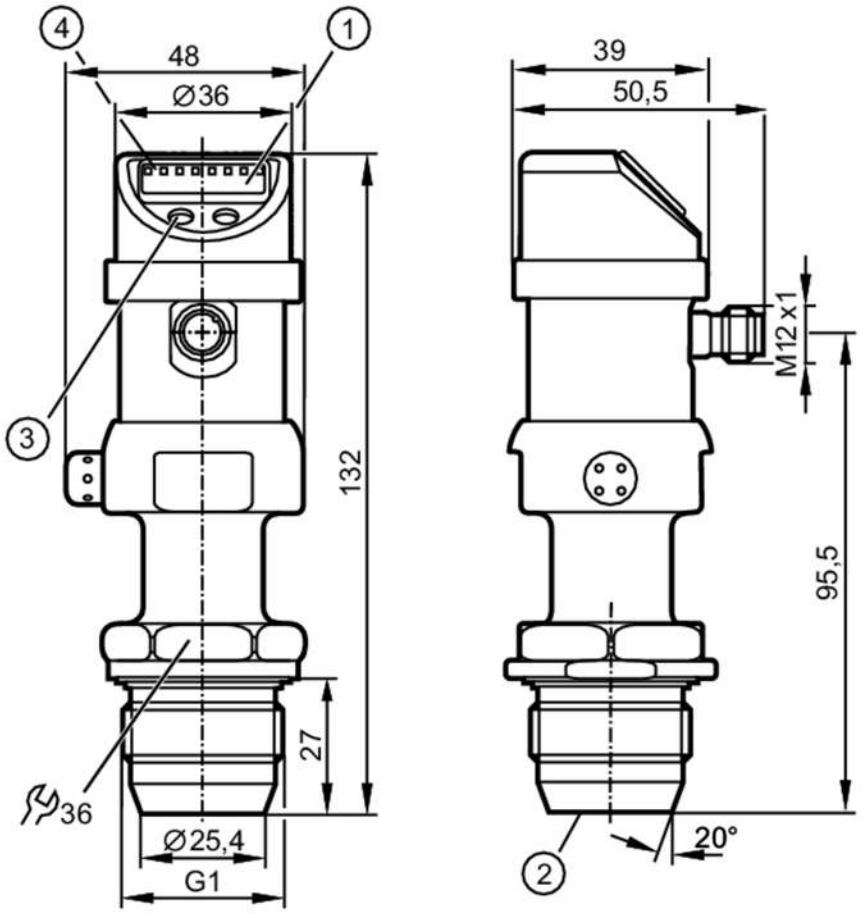

1 alphanumeric display 4-digit
2 recessed non flush mount measuring cell
3 programming button
4 status LEDs

CE EC 1935/2004 Ex FDA UK CA

Product characteristics			
Number of inputs and outputs	Number of digital outputs: 1; Number of analogue outputs: 1		
Measuring range	-1...25 bar	-14.4...362.7 psi	-0.1...2.5 MPa
Process connection	threaded connection G 1 external thread sealing cone		
Application			
Special feature	Gold-plated contacts		
Application	food and beverage industry		
Installation	freely rotatable housing 350°		
Media	viscous media and liquids with suspended particles; liquids and gases		
Medium temperature [°C]	-20...60; (when used outside the hazardous area:; Ambient temperature: -25...85 °C; Medium temperature: -25...125 °C / 145 °C < 1h)		
Min. bursting pressure	350 bar	5070 psi	35 MPa
Pressure rating	100 bar	1450 psi	10 MPa
Type of pressure	relative pressure; vacuum		
Electrical data			
Operating voltage [V]	18...32 DC		

PI003A

Pressure sensor with display

PI-025-REA01-MFRKG/US/3D/3G /P

Current consumption [mA]	< 50	
Protection class	III	
Reverse polarity protection	yes	
Power-on delay time [s]	0.5	
Measuring principle	hydrostatic	
Integrated watchdog	yes	
Inputs / outputs		
Number of inputs and outputs	Number of digital outputs: 1; Number of analogue outputs: 1	
Outputs		
Total number of outputs	2	
Output signal	switching signal; analogue signal; (configurable)	
Electrical design	PNP/NPN	
Number of digital outputs	1	
Output function	normally open / normally closed; (parameterisable)	
Max. voltage drop switching output DC [V]	2	
Permanent current rating of switching output DC [mA]	250	
Switching frequency DC [Hz]	6	
Number of analogue outputs	1	
Analogue current output [mA]	4...20, invertible; (scalable 1:4)	
Max. load [Ω]	(Ub - 10 V) / 20 mA	
Analogue voltage output [V]	0...10, invertible; (scalable 1:4)	
Min. load resistance [Ω]	2000	
Short-circuit protection	yes	
Type of short-circuit protection	pulsed	
Overload protection	yes	

Measuring/setting range			
Measuring range	-1...25 bar	-14.4...362.7 psi	-0.1...2.5 MPa
Set point SP	-0.96...25 bar	-13.8...362.7 psi	-0.096...2.5 MPa
Reset point rP	-1...24.96 bar	-14.4...362.1 psi	-0.1...2.496 MPa
Analogue start point	-1...18.74 bar	-14.4...271.8 psi	-0.1...1.874 MPa
Analogue end point	5.24...25 bar	76.2...362.7 psi	0.524...2.5 MPa
In steps of	0.02 bar	0.3 psi	0.002 MPa

Accuracy / deviations	
Switch point accuracy [% of the span]	< ± 0,2; (Turn down 1:1)
Repeatability [% of the span]	< ± 0,1; (with temperature fluctuations < 10 K; Turn down 1:1)
Characteristics deviation [% of the span]	< ± 0,2; (Turn down 1:1 , linearity, incl. hysteresis and repeatability , limit value setting to DIN EN IEC 62828-1)
Linearity deviation [% of the span]	< ± 0,15; (Turn down 1:1)
Hysteresis deviation [% of the span]	< ± 0,15; (Turn down 1:1)
Long-term stability	< ± 0,1; (Turn down 1:1; per year)

PI003A

Pressure sensor with display

PI-025-REA01-MFRKG/US/3D/3G /P

	[% of the span]		
Temperature coefficient zero point [% of the span / 10 K]		< ± 0,05; (0...70 °C)	
Temperature coefficient span [% of the span / 10 K]		< ± 0,15; (0...70 °C)	
Response times			
Response time	[ms]	< 100	
Damping process value dAP	[s]	0.1...100	
Damping for the analogue output dAA	[s]	0.1...100	
Step response time analogue output	[ms]	25	
Software / programming			
Parameter setting options		hysteresis / window; normally open / normally closed; switching logic; current/voltage output; Damping; adaptation of displayed values; display can be rotated and switched off; Display unit; zero point; span	
Operating conditions			
Ambient temperature	[°C]	-20...60	
Storage temperature	[°C]	-40...100	
Protection		IP 65	
Tests / approvals			
ATEX marking		II 3D Ex tc IIIC T90°C Dc X	
		II 3G Ex nA IIC T4 Gc X	
EMC		EN 61000-4-2 ESD	4 kV CD / 8 kV AD
		EN 61000-4-3 HF radiated	10 V/m
		EN 61000-4-4 Burst	2 kV
		EN 61000-4-5 Surge	0,5/1 kV
		EN 61000-4-6 HF conducted	10 V
Shock resistance		DIN IEC 68-2-27	50 g (11 ms)
Vibration resistance		DIN IEC 68-2-6	20 g (10...2000 Hz)
MTTF	[years]	163	
Mechanical data			
Weight	[g]	512.5	
Housing		cylindrical	
Dimensions	[mm]	Ø 36 / L = 132	
Materials		stainless steel (316L/1.4404); PC; PBT; PEI; FKM; PTFE	
Materials (wetted parts)		ceramics (99.9 % Al2O3); stainless steel (316L/1.4435); stainless steel (316L/1.4404); surface characteristics: Ra < 0,4 / Rz 4; PTFE; EPDM	
Min. pressure cycles		100 million	
Process connection		threaded connection G 1 external thread sealing cone	
Displays / operating elements			
Display		Display unit	4 x LED, green
		switching status	LED, yellow
		function display	alphanumeric display, 4-digit
		measured values	alphanumeric display, 4-digit

PI003A

Pressure sensor with display

PI-025-REA01-MFRKG/US/3D/3G /P

Display unit	bar; psi; MPa; % of the span

Remarks

Pack quantity	1 pcs.

Electrical connection

Connector: 1 x M12; coding: A; Contacts: gold-plated



Connection

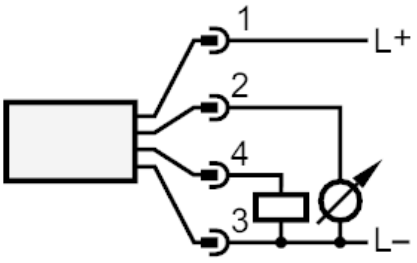

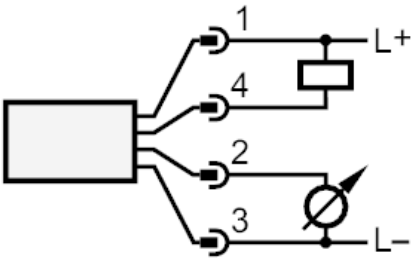

OUT1	switching output
OUT2	analogue output