Part Number: **BU-70/BU-70C**
Description: **Alligator Clip**
3107

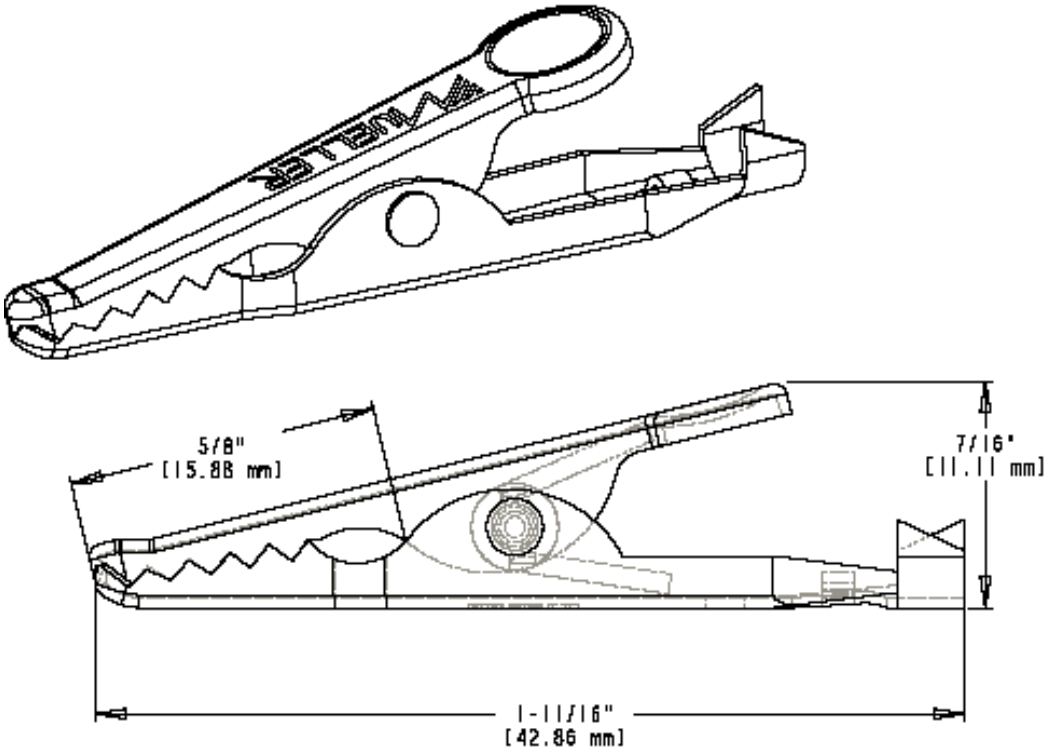

- Alligator Clip
- Solder or crimp connection
- Jaw opens 0.313” (7.9 mm) max
- Material: nickel-plated steel (BU-70) or solid copper (BU-70C)
- Length: 1.69” (42.86 mm)
- Rating: 5 Amps (BU-70) or 10 Amps (BU-70C)
- RoHS Compliant

Mueller Electric Company
1625 E. 31st Street
Cleveland, Ohio 44114

ISO 9001:2000
Over 95 Years Of Innovation
www.muellerelectric.com

TEL. 800-955-2629
TEL. 216-771-5225
FAX. 216-771-3068