Brand of NTN corporation

Technical data

BBE25UU-OP

Standard ball bushings open



VISUAL (S)

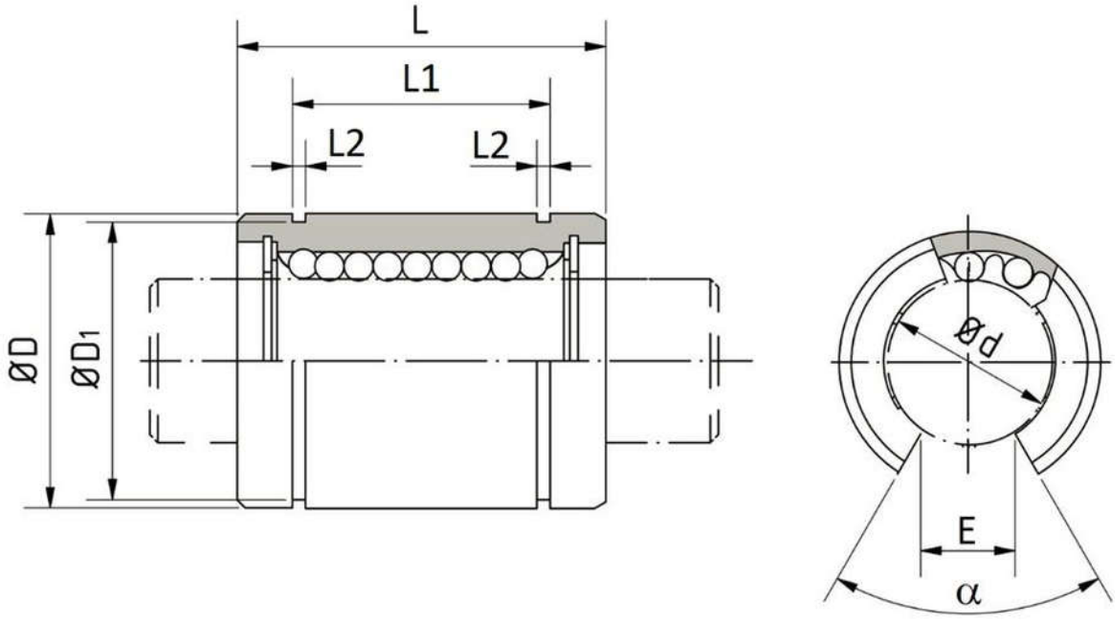

PRODUCT DEFINITION

Brand	SNR
Design type	BBE-OP
Ball bushings category	Standard ball bushings, open
Standard	ISO dimension
Number of seals	2
Material outer cylinder or steel segments	100Cr6
Material Cage	PA
Initial greasing	Non/No
d - Internal diameter	25 mm

BBE25UU-OP
Standard ball bushings open

PRODUCT DEFINITION	
d - Internal diameter tolerance	0,011/-0,001
D - External diameter	40 mm
D - External diameter tolerance	0/-0,011
L - Length	58 mm
L - Length tolerance	0/-0,3
L1	44,1 mm
L1 tolerance	0/-0,3
D1 - Diameter	37,5 mm
L2	1,85 mm
E	12,5 mm
Alpha	60 °
Number of ball rows	5
Mass	0,195 kg

PRODUCT PERFORMANCE	
Cmin	0,908 kN
Cmax	0,908 kN
C0min	1,57 kN
C0max	1,57 kN
Crev for OP	517.56
C0rev for OP	894.9
Tmin - Min operating temperature	-20 °C
Tmax - Max operating temperature	80 °C

ESHOPDONOTDISPLAY

BBE25UU-OP
Standard ball bushings open

ESHOPDONOTDISPLAY	
Reference	BBE25UU-OP
Image	BBE-OP_1.JPG, BBE-OP_3.JPG
Send to Eshop	Yes
Send to Paper Catalog	Yes
Tracepart	Oui/Yes