E11961

Clean-line cylinder mounting clamp for cylinder sensors

CLAMP FOR CLEAN LINE CYL D12

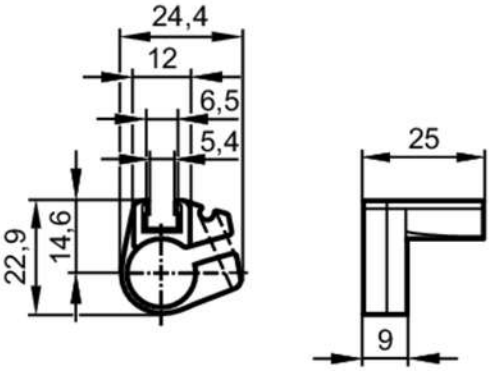

Application		
Design		for types MKT
Operating conditions		
Ambient temperature	[°C]	0...50
Mechanical data		
Weight	[g]	7.7
Materials		mounting clamp: POM; fixture: aluminium; screw: stainless steel
Piston diameter	[mm]	12
Accessories		
Items supplied		socket head screws: 1 x SW2,5
Remarks		
Pack quantity		1 pcs.
Diagrams and graphs		
Installation		