- **Port size: 1/4” (ISO G/NPT)**
- **Reliable, rugged, open loop control**
- **Proportional I/P and E/P converters**
- **ATEX certified units are available as intrinsically safe**
- **Minimum vibration effects**
- **IP65 environmental protection**
- **Mounting bracket and connector included**



Technical features

Medium:
Oil free, dry air, filtered to 5 µm
Output Pressure:
100X: 0,2 ... 1 bar (2,9 ... 14 psi),
3 ... 15 (0,2 ... 1 bar)
3 ... 27 psi (0,2 ... 1,8 psi)
101X: 0,14 ... 8 bar (2 ... 116 psi)
2 ... 120 (0,1 ... 8 bar)
Supply pressure:
At least 0,7 bar (10 psi) above maximum required output pressure.
max. 5 bar(72 psi)
Flow capacity:
> 300Nl/min forward & relief flow
Air consumption:
up to 1 bar (15 psi): 2,8 Nl/min
up to 2 bar (27 psi): 4,0 Nl/min
Linearity:
< 0,5% of span

Hysteresis:
< 0,5% of span
Response Time:
<0,35 seconds for 10 .... 90% or 90 ...10% of output pressure into a 10cc load (1 bar range instruments)
Temperature Sensitivity:
< 0,1% of span/°C between -40 ... +85°C
Supply sensitivity:
<0,075% span output change per % supply pressure change
Port sizes:
Main ports: G 1/4 or 1/4 NPT
Integral gauge ports: G 1/4 or 1/4 NPT

Ambient/Media Temperature:
-40 ... +85°C (-40 ... +185°F)
Air supply must be dry enough to avoid ice formation at temperatures below +2°C (+35°F).
I.P. Rating:
IP65 in normal operation
Weight:
1,0 kg
Mounting Position:
Surface mounting bracket provided.
Alternative mounting options available
Vibration Effect:
5% of span: 4mmp-p 5 ... 15Hz and 2g sine 15 ... 150Hz.

Materials:
Body: Passivated zinc die-casting, epoxy painted
Cover: Glass reinforced nylon
Diaphragms: NBR

Electrical parameters

Input Signal	mA versions 1 ... 4 bar: 2 wire 4 ... 20 mA; 3 wire 4 ... 20 mA +12 ... 24 V mA versions 6 ... 8 bar: 3 wire 4 ... 20 mA +12 ... 24 V voltage versions 1 ... 4 bar: 2 wire 0 ... 10 V; 3 wire 0 ... 10 V +12 ... 24 V voltage versions 6 ... 8 bar: 3 wire 0 ... 10 V +12 ... 24 V
Failure Mode	Output pressure falls to zero signal state when electrical supply fails
Connections	30 mm square connector provided (DIN 43650, form A) mountable in four orientations
Span/Zero	Adjustable up to 20 % output range - further information available

Technical data - standard models

Symbol	Output pressure	Input Signal	ATEX intrinsically safe	Weight (kg)	Model
	3 ... 15 psi	4 ... 20 mA		1,0	400100R
	0,2 ... 1 bar	4 ... 20 mA		1,0	402100R
	3 ... 15 psi	4 ... 20 mA	x	1,0	490100R
	0,2 ... 1 bar	4 ... 20 mA	x	1,0	492100R
	2 ... 120 psi	4 ... 20 mA			570400R
	0,14 ... 8 bar	4 ... 20 mA			572400R

Certification

Certification agency	Type 100X Intrinsically Safe
SIRA (CENELEC ATEX approved) to EN60079	Sira 02ATEX2002X Ex ia IIC T4 Ga (Ta = -40° to +80 °C) Ui = 28 V, Ii = 59 mA, Pi = 0.633 W Ci = 0 Li = 10 mH CE Ex II 1G

Our policy is one of continued research and development. We therefore reserve the right to amend, without notice, the specifications given in this document. (2006 - 114d) © 2015 Norgren Ltd.

Option selector - 100X

4★★★★★R

Input signal	Substitute
4 ... 20 mA	0
0 ... 20 mA	2
1 ... 5 V	3
0 ... 10 V/ 1 ... 10 V	4
Intrinsically safe	9

Version	Substitute
Standard	00
Weatherbox	10
Output pressure	**Substitute**
3 ... 15 psi	01
3 ... 27 psi	07
0,2 ...1 bar	21

Option selector - 101X

5★★★00R

Input signal	Substitute
0 ... 60 mA (basic 2 wire)	0
1 ... 10 V (basic 2 wire)	4
1 ... 5 V (analogue 3 wire)	5
1 ... 10 V (analogue 3 wire)	6
4 ... 20 mA (analogue 3 wire)	7

Output pressure	Substitute
2 ... 120 psi	04
0,14 ...8 bar	24

Other options available:

- Alternative input signal ranges
- Alternative pressure ranges
- Flying Leads
- Conduit entry with flying leads
- Junction box (M20 / ½" NPT)
- Intrinsically safe certification
- 50mm pipe mounting bracket
- Captured exhaust
- Reverse acting
- Split range
- For G 1/4 ports, contact your representative

Dimensions

Dimensions in mm
Projection/First angle

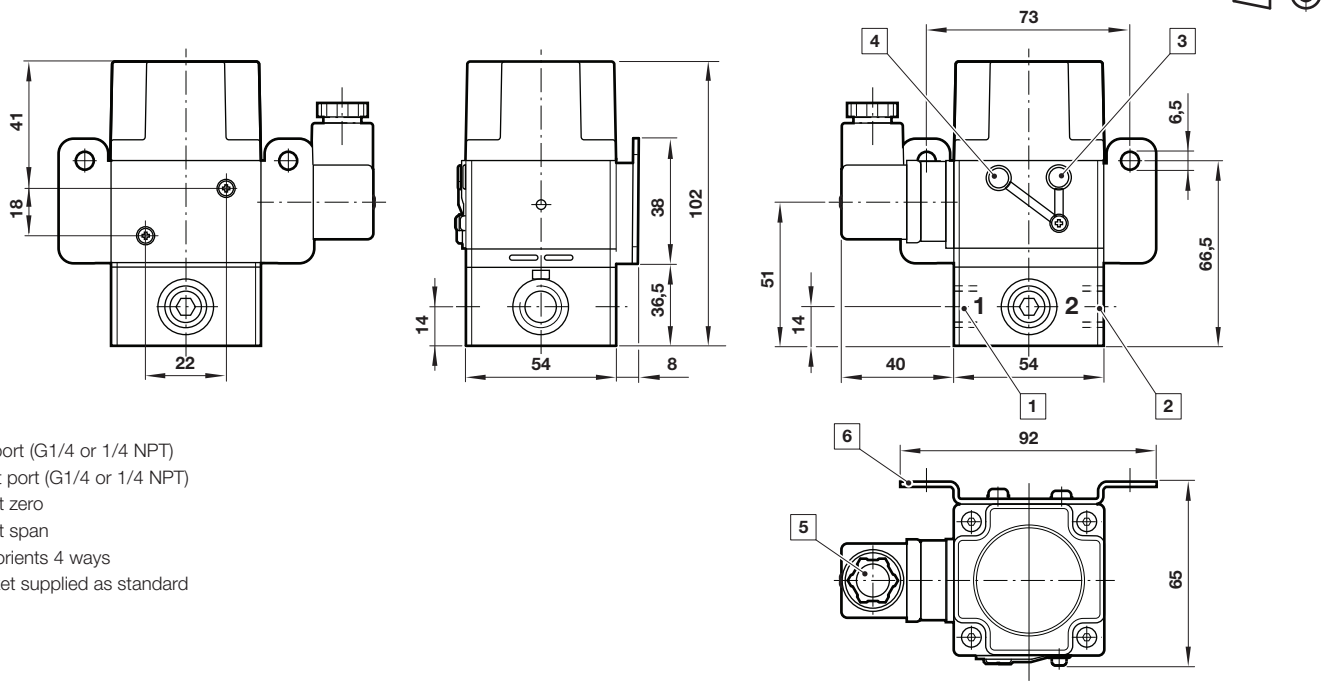

1 Inlet port (G1/4 or 1/4 NPT)
2 Outlet port (G1/4 or 1/4 NPT)
3 Adjust zero
4 Adjust span
5 Plug orients 4 ways
6 Bracket supplied as standard

Warning

These products are intended for use in industrial compressed air systems only. Do not use these products where pressures and temperatures can exceed those listed under **»Technical features/data«**.
Before using these products with fluids other than those specified, for non-industrial applications, life-support systems or other applications not within published specifications, consult IMI NORGREN.

Through misuse, age, or malfunction, components used in fluid power systems can fail in various modes.

The system designer is warned to consider the failure modes of all component parts used in fluid power systems and to provide adequate safeguards to prevent personal injury or damage to equipment in the event of such failure.
System designers must provide a warning to end users in the system instructional manual if protection against a failure mode cannot be adequately provided.
System designers and end users are cautioned to review specific warnings found in instruction sheets packed and shipped with these products.

Our policy is one of continued research and development. We therefore reserve the right to amend, without notice, the specifications given in this document. (2006 - 114d) © 2015 Norgren Ltd.