

Contactor relay, 3N/O+1N/C, AC

Part no. DILA-31(230V50HZ,240V60HZ)
Article no. 276364
Catalog No. XTRE10B31F

Powering Business Worldwide

Delivery programme

Product range			DILA relays
Application			Contactor relays
Description			Basic devices with positive operation contacts
Connection technique			Screw terminals
Rated operational current			
AC-15			
220 V 230 V 240 V	I_e	A	4
380 V 400 V 415 V	I_e	A	4
Contacts			
N/O = Normally open			3 N/O
N/C = Normally closed			1 NC
Contact sequence			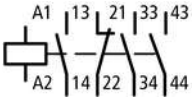
Code number and version of combination			
Distinctive number			31E
Can be combined with auxiliary contact module			DILA-XHI(V)…
Actuating voltage			230 V 50 Hz, 240 V 60 Hz
Voltage AC/DC			AC operation
Instructions			Contact numbers to EN 50011 Coil terminal markings to EN 50005

Technical data

General

Standards			IEC/EN 60947, VDE 0660, UL, CSA
Lifespan, mechanical			
AC operated	Operations	x 10^6	20
DC operated	Operations	x 10^6	20
Maximum operating frequency		Ops./h	
Maximum operating frequency	Operations/h		9000
Climatic proofing			Damp heat, constant, to IEC 60068-2-78 Damp heat, cyclic, to IEC 60068-2-30
Ambient temperature			
Open		°C	-25 - +60
Enclosed		°C	- 25 - 40
Ambient temperature, storage		°C	- 40 - 80
Mounting position			
Mounting position			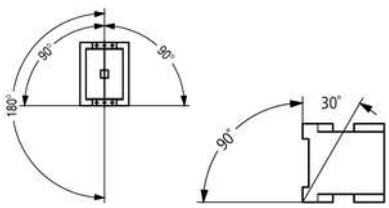
Mechanical shock resistance (IEC/EN 60068-2-27)			
Half-sinusoidal shock, 10 ms			
Basic unit with auxiliary contact module		g	
N/O contact		g	7
N/C contact		g	5

Degree of Protection			IP20
Protection against direct contact when actuated from front (EN 50274)			Finger and back-of-hand proof
Weight			
AC operated		kg	0.23
DC operated		kg	0.28
Terminal capacities		mm^2	
Screw terminals			
Solid		mm^2	1 x (0,75 - 4) 2 x (0,75 - 2,5)
Flexible with ferrule		mm^2	1 x (0.75 - 2.5) 2 x (0.75 - 2.5)
Solid or stranded		AWG	18 - 14
Terminal screw			M3.5
Pozidriv screwdriver		Size	2
Standard screwdriver		mm	0.8 x 5.5 1 x 6
Max. tightening torque		Nm	1.2
Spring-loaded terminals			
Solid		mm^2	1 x (0.75 - 2.5) 2 x (0.75 - 2.5)
Flexible with or without ferrule DIN 46228		mm^2	1 x (0,75 - 1.5) 2 x (0,75 - 1.5)
Solid or stranded		AWG	18 - 14
Standard screwdriver		mm	0.6 x 3.5

Contacts

Positive operating contacts to ZH 1/457, including auxiliary contact module			Yes
Rated impulse withstand voltage	U_{imp}	V AC	6000
Overvoltage category/pollution degree			III/3
Rated insulation voltage	U_i	V AC	690
Rated operational voltage	U_e	V AC	690
Rated operational current		A	
Conventional free air thermal current, 3 pole, 50 - 60 Hz			
Open			
Conv. thermal current	I_{th}	A	16
AC-15			
220 V 230 V 240 V	I_e	A	4
380 V 400 V 415 V	I_e	A	4
500 V	I_e	A	1.5
DC current			
DC-13 L/R - 15 ms			
Contacts in series:		A	
1	24 V	A	10
1	60 V	A	6
2	60 V	A	10
1	110 V	A	3
3	110 V	A	6
1	220 V	A	1
3	220 V	A	5
DC L/R ≦ 50 ms			
Contacts in series:		A	
3	24 V	A	4
3	60 V	A	4
3	110 V	A	2
3	220 V	A	1
Conv. thermal current	I_{th}	A	16
Safe isolation to EN 61140			

between coil and auxiliary contacts		V AC	400
between the auxiliary contacts		V AC	400
Control circuit reliability	Failure rate	λ	$<10^{-8}$, < one failure at 100 million operations (at U_e = 24 V DC, U_{min} = 17 V, I_{min} = 5.4 mA)
Short-circuit rating without welding			
Maximum overcurrent protective device			
220 V 230 V 240 V		PKZM0	4
380 V 400 V 415 V		PKZM0	4
Short-circuit protection maximum fuse			
500 V		A gG/gL	10
Current heat loss at I_{th}			
AC operated		W	0.3
DC operated		W	0.3

Magnet systems

Voltage tolerance		x U_c	
AC operated		x U_c	
	Pick-up	x U_c	0.8 - 1.1
DC operated		x U_c	
	Pick-up	x U_c	0.8 - 1.1
at 24 V: without auxiliary contact component (40 °C)	Pick-up	x U_c	0.7 - 1.3
Power consumption			
50 Hz	Pick-up	VA	24
50 Hz	Sealing	VA	3.4
50 Hz	Sealing	W	1.2
60 Hz	Pick-up	VA	30
60 Hz	Sealing	VA	4.4
60 Hz	Sealing	W	1.4
50/60 Hz	Pick-up	VA	27 25
50/60 Hz	Sealing	VA	4.2 3.3
50/60 Hz	Sealing	W	1.4 1.2
DC operated	Pull-in = sealing	W	3
duty factor		% DF	100
Switching times at 100 % U_c (approximate values)			
AC operated closing delay		ms	15 - 21
AC operated N/O contact opening delay		ms	9 - 18
DC operated closing delay		ms	
Switching times, DC operated, max. closing delay		ms	31
DC operated N/O contact opening delay		ms	
Switching times, DC actuated make contact Opening delay, max.		ms	12

Notes

Notes Making and breaking conditions to DC-13, time constant as stated
Smoothed DC, three-phase bridge rectifiers or smoothed double-wave rectification

Design verification as per IEC/EN 61439

Technical data for design verification			
Rated operational current for specified heat dissipation	I_n	A	15.5
Heat dissipation per pole, current-dependent	P_{vid}	W	0.5
Equipment heat dissipation, current-dependent	P_{vid}	W	0
Static heat dissipation, non-current-dependent	P_{vs}	W	1.4
Heat dissipation capacity	P_{diss}	W	0
Operating ambient temperature min.		°C	-25
Operating ambient temperature max.		°C	60
IEC/EN 61439 design verification			

10.2 Strength of materials and parts			
10.2.2 Corrosion resistance			Meets the product standard's requirements.
10.2.3.1 Verification of thermal stability of enclosures			Meets the product standard's requirements.
10.2.3.2 Verification of resistance of insulating materials to normal heat			Meets the product standard's requirements.
10.2.3.3 Verification of resistance of insulating materials to abnormal heat and fire due to internal electric effects			Meets the product standard's requirements.
10.2.4 Resistance to ultra-violet (UV) radiation			Meets the product standard's requirements.
10.2.5 Lifting			Does not apply, since the entire switchgear needs to be evaluated.
10.2.6 Mechanical impact			Does not apply, since the entire switchgear needs to be evaluated.
10.2.7 Inscriptions			Meets the product standard's requirements.
10.3 Degree of protection of ASSEMBLIES			Does not apply, since the entire switchgear needs to be evaluated.
10.4 Clearances and creepage distances			Meets the product standard's requirements.
10.5 Protection against electric shock			Does not apply, since the entire switchgear needs to be evaluated.
10.6 Incorporation of switching devices and components			Does not apply, since the entire switchgear needs to be evaluated.
10.7 Internal electrical circuits and connections			Is the panel builder's responsibility.
10.8 Connections for external conductors			Is the panel builder's responsibility.
10.9 Insulation properties			
10.9.2 Power-frequency electric strength			Is the panel builder's responsibility.
10.9.3 Impulse withstand voltage			Is the panel builder's responsibility.
10.9.4 Testing of enclosures made of insulating material			Is the panel builder's responsibility.
10.10 Temperature rise			The panel builder is responsible for the temperature rise calculation. Eaton will provide heat dissipation data for the devices.
10.11 Short-circuit rating			Is the panel builder's responsibility. The specifications for the switchgear must be observed.
10.12 Electromagnetic compatibility			Is the panel builder's responsibility. The specifications for the switchgear must be observed.
10.13 Mechanical function			The device meets the requirements, provided the information in the instruction leaflet (IL) is observed.

Technical data ETIM 6.0

Low-voltage industrial components (EG000017) / Contactor relay (EC000196)		
Electric engineering, automation, process control engineering / Low-voltage switch technology / Contactor (LV) / Contactor relay (ecl@ss8.1-27-37-10-01 [AAB716011])		
Rated control supply voltage Us at AC 50HZ	V	230 - 230
Rated control supply voltage Us at AC 60HZ	V	240 - 240
Rated control supply voltage Us at DC	V	0 - 0
Voltage type for actuating		AC
Rated operation current Ie , 400 V	A	4
Connection type auxiliary circuit		Screw connection
Mounting method		DIN-rail/screw
Interface		No
Number of auxiliary contacts as normally closed contact		1
Number of auxiliary contacts as normally open contact		3
Number of auxiliary contacts as normally closed contact, delayed switching		0
Number of auxiliary contacts as normally open contact, leading		0
With LED indication		No
Number of auxiliary contacts as change-over contact		0
Manual operation possible		No

Approvals

Product Standards		IEC/EN 60947-4-1; UL 508; CSA-C22.2 No. 14-05; CE marking
UL File No.		E29184
UL Category Control No.		NKCR
CSA File No.		012528
CSA Class No.		3211-03
North America Certification		UL listed, CSA certified
Specially designed for North America		No

Characteristics

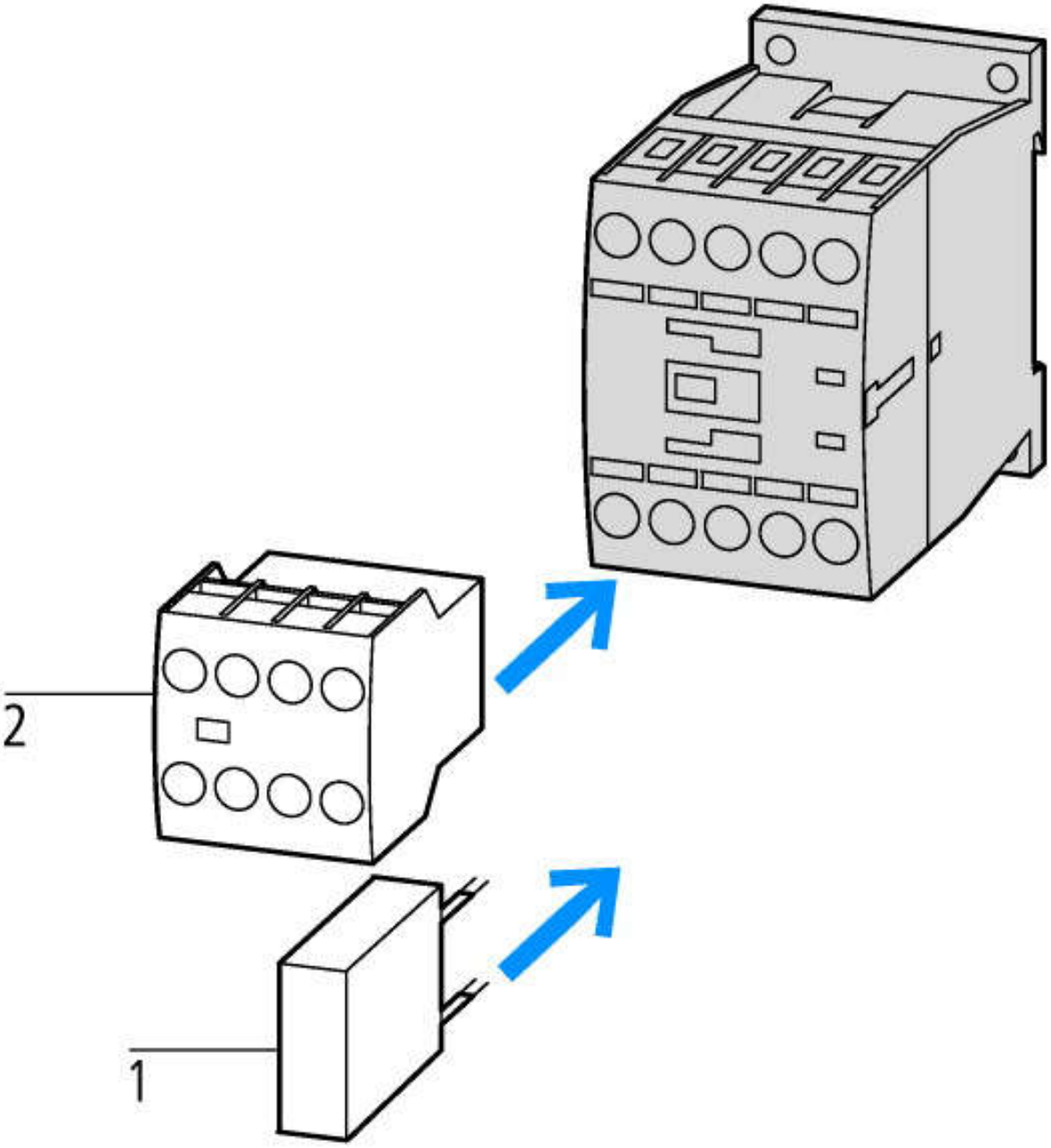

1: Suppressor
2: Auxiliary contact module

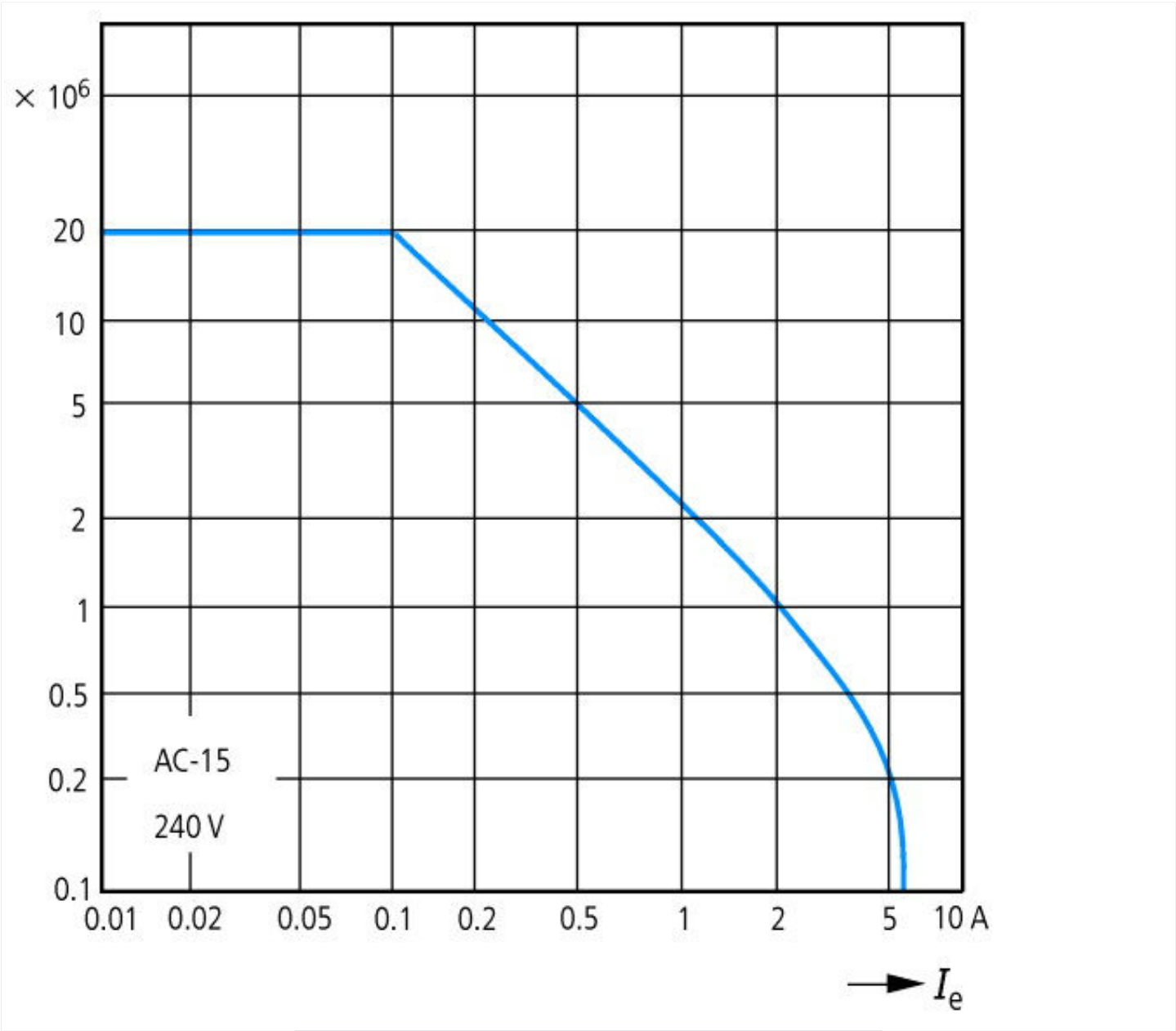

Component lifespan (operations)
Ie = Rated operational current

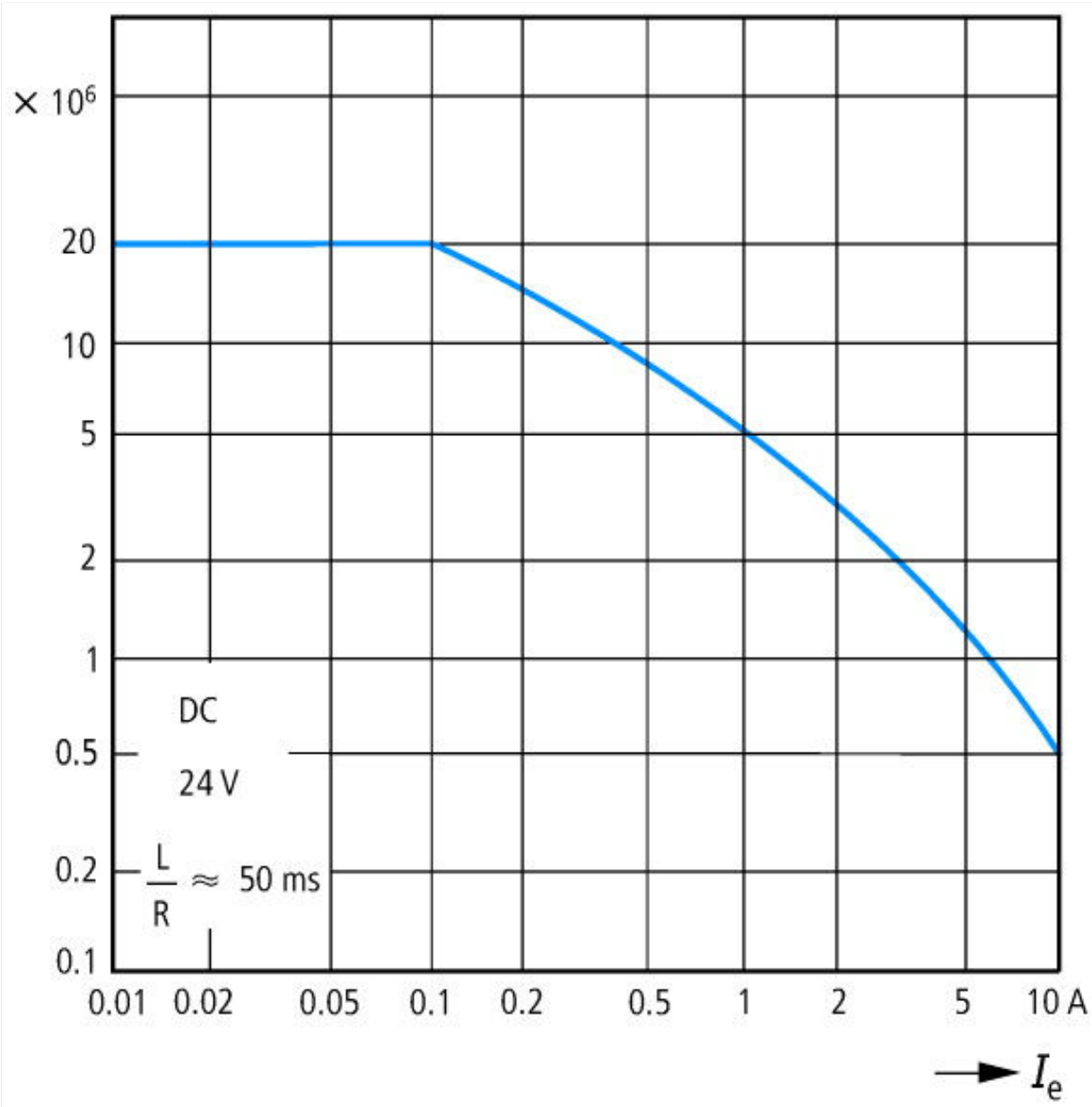

Component lifespan (operations)
Ie = Rated operational current

Dimensions

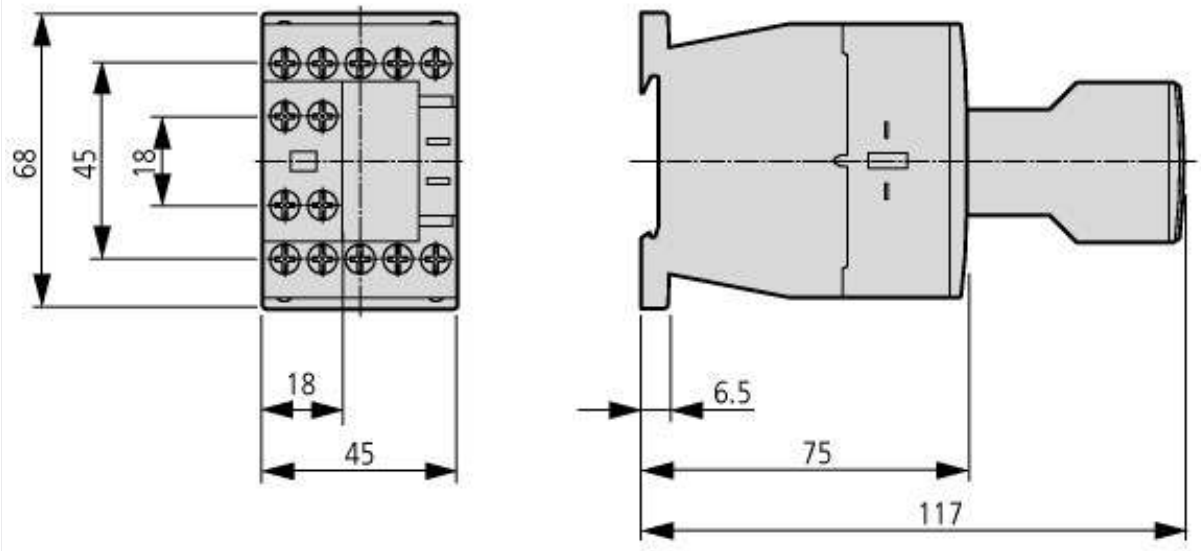

Contactor with auxiliary contact module

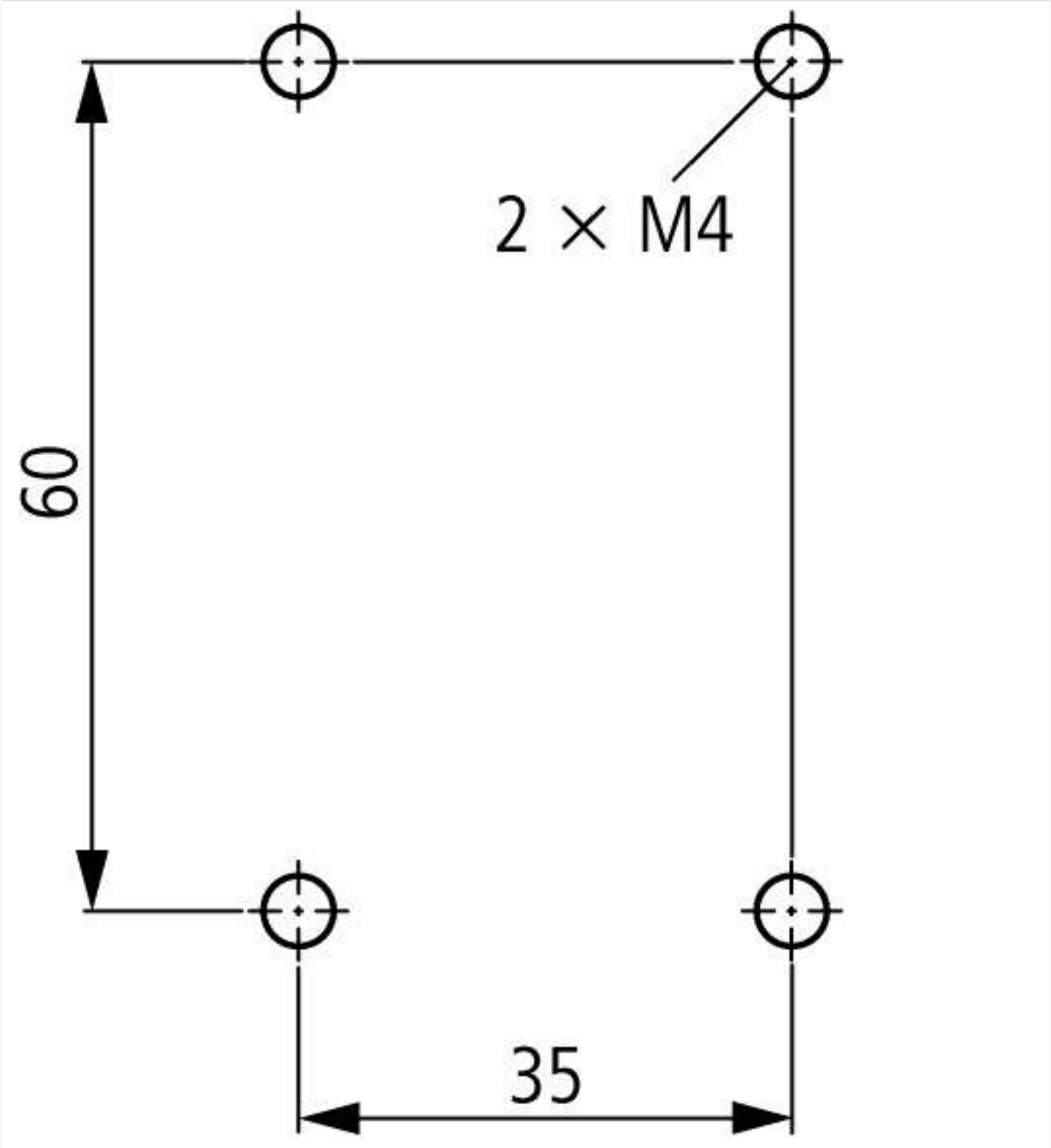

Additional product information (links)

IL03407013Z (AWA2100-2126) Contactors	
IL03407013Z (AWA2100-2126) Contactors	ftp://ftp.moeller.net/DOCUMENTATION/AWA_INSTRUCTIONS/IL03407013Z2012_03.pdf
UL/CSA: Approved rating data	http://de.ecat.moeller.net/flip-cat/?edition=HPLTE&startpage=5.84

© 02/2016 by Eaton Industries GmbH