Photoelectric Sensors

BOS R020K-PS-RX11-00,2-S49
Order Code: BOS0214

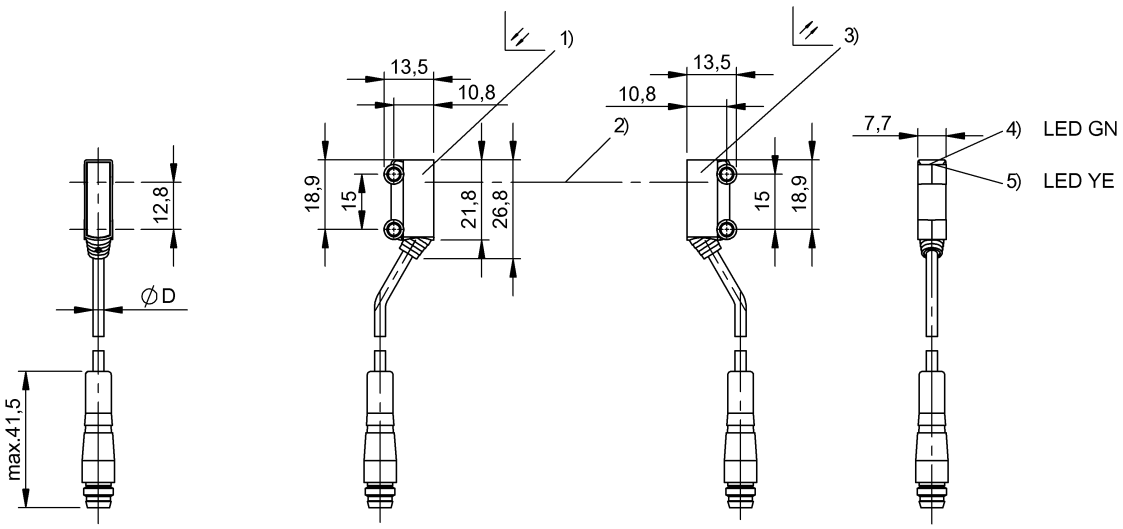

1) Emitter, 2) Optical axis, 3) Receiver, 4) Operating voltage, 5) Output function

Basic features

Approval/Conformity	CE cULus WEEE UKCA
Basic standard	IEC 60947-5-2
Principle of operation	Photoelectric sensor
Series	R020K
Style	Square Connection 60°

Display/Operation

Display	LED green: Power LED yellow: Light received

Electrical connection

Cable diameter D	2.40 mm
Cable length L	0.2 m
Connection	Cable with connector, M8x1-Male, 3-pin, 0.20 m, PVC
Polarity reversal protected	yes
Protection against device mix-ups	yes
Short-circuit protection	yes

Electrical data

Operating voltage Ub	10...30 VDC
Rated operating current Ie	100 mA
Rated operating voltage Ue DC	24 V
Ready delay tv max.	100 ms
Ripple max. (% of Ue)	10 %
Switching frequency	800 Hz
Turn-off delay toff max.	0.63 ms
Turn-on delay ton max.	0.63 ms
Voltage drop Ud max. at Ie	2 V

Photoelectric Sensors

BOS R020K-PS-RX11-00,2-S49
Order Code: BOS0214

Environmental conditions

Ambient temperature	-25...55 °C
IP rating	IP67

Functional safety

MTTF (40 °C)	2659 a

Interface

Switching output	PNP normally open (NO)

Material

Housing material	PC PBT
Material jacket	PVC
Material sensing surface	PMMA

Mechanical data

Dimension	7.7 x 26.8 x 13.5 mm
Mounting part	Screw M3

Optical features

Ambient light max.	5000 Lux
Beam characteristic	Divergent
Light spot size	Ø 23 mm at 500 mm
Light type	LED, red light
Principle of optical operation	Through-beam sensor
Switching function, optical	dark-on
Wave length	660 nm

Range/Distance

Range	0...2 m
Rated operating distance Sn	2 m

Remarks

Actuation object (target): gray card, 200 x 200, lateral approach.
For additional information, refer to user's guide.
Order accessories separately.
For more information about MTTF and B10d see MTTF / B10d Certificate

Indication of the MTTF- / B10d value does not represent a binding composition and/or life expectancy assurance; these are simply experiential values with no warranty implications. These declared values also do not extend the expiration period for defect claims or affect it in any way.

Connector Drawings



Wiring Diagrams (Schematic)

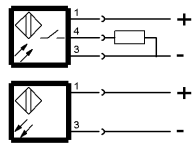

Opto Symbols

