DATASHEET

FLEXIBLE TOGGLE LATCH 40082 JZI

PICTURES

DESCRIPTION:

A high strength key lock latch with flexible side links which give increased positioning tolerance.
Suitable for screw fixing using M5 screws
Approximate fixing position to give 200daN tension, using catch plate =116,5 mm
Maximum operating tension: 300daN
Possibility of sealing

Supply with dimensions template for marking out + catch plate + 2 keys

FEATURES:

- Finish: Zinc Plated
- Material: Steel
- Dimensions: 126 x 46,5 x 19,5 mm
- Length: 126 mm
- Width: 46,5 mm
- Depth: 19,5 mm

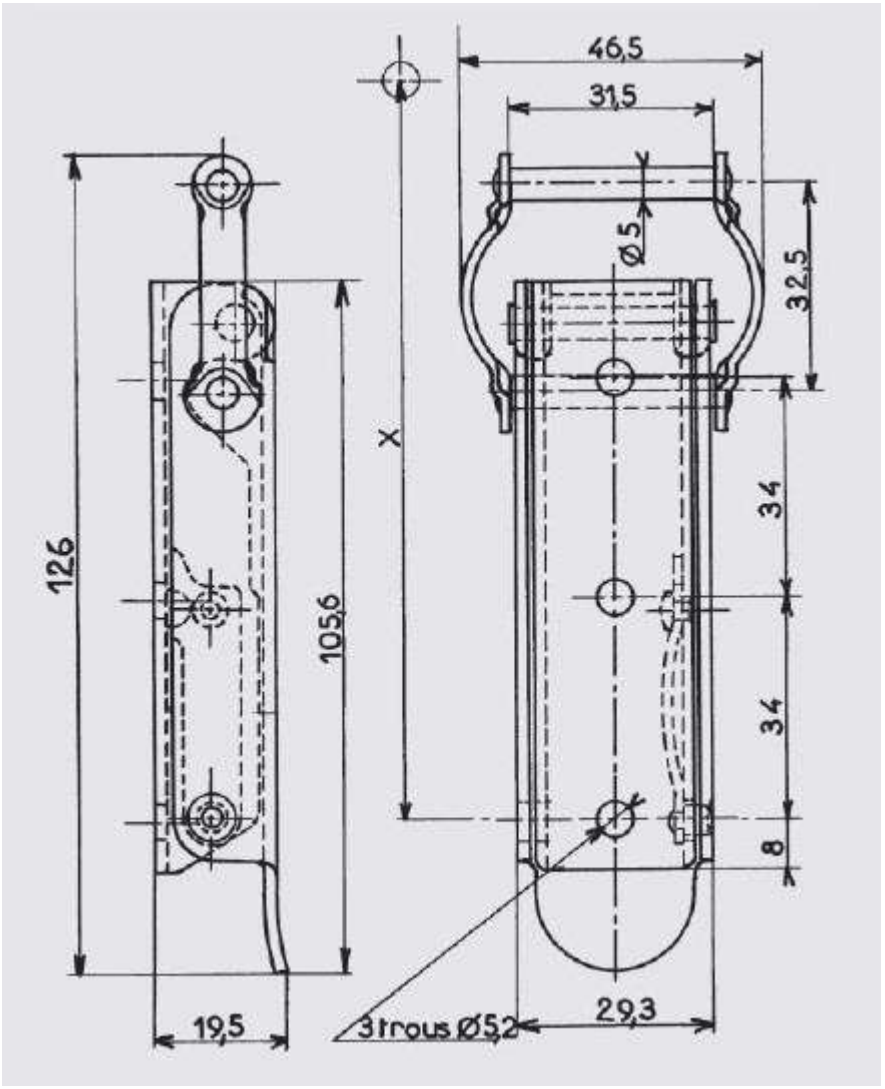
46,5
31,5
Ø5
32,5
X
34
34
8
126
105,6
19,5
3 trous Ø5,2
29,3

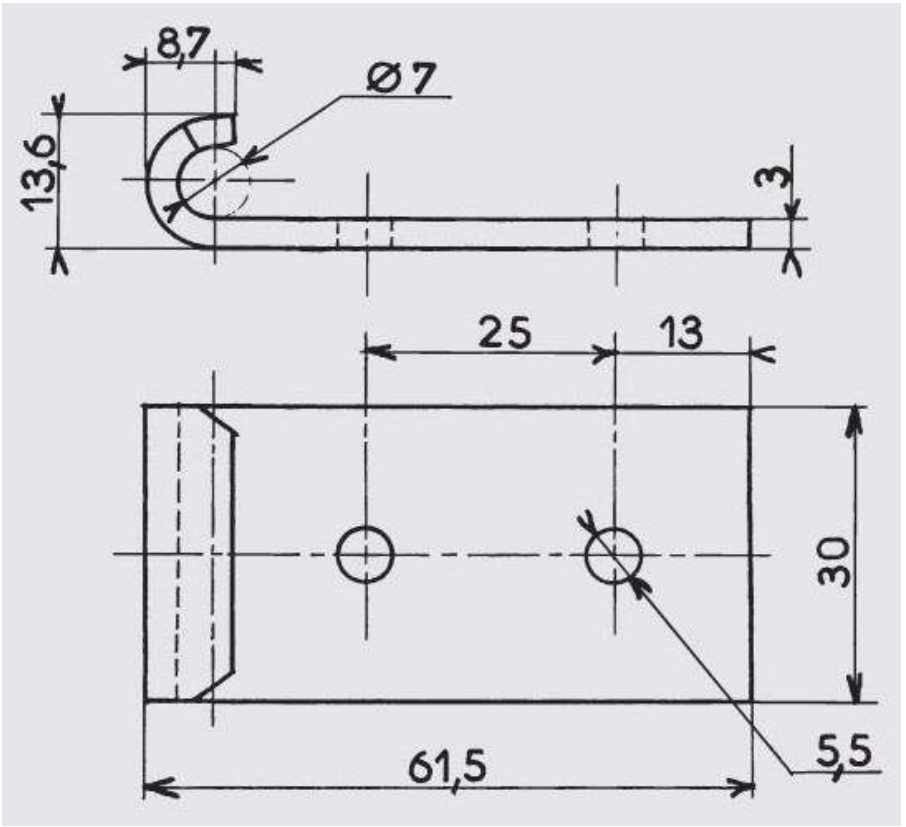
8,7
Ø7
13,6
3
25
13
30
61,5
5,5