BUS R06K1-XA-02/015-S75G
Ordering code: BUS004K

BALLUFF
sensors worldwide

Ultrasonic sensor
R06

Connector, M8x1-S75
Working range 20...250 mm
0...10 V

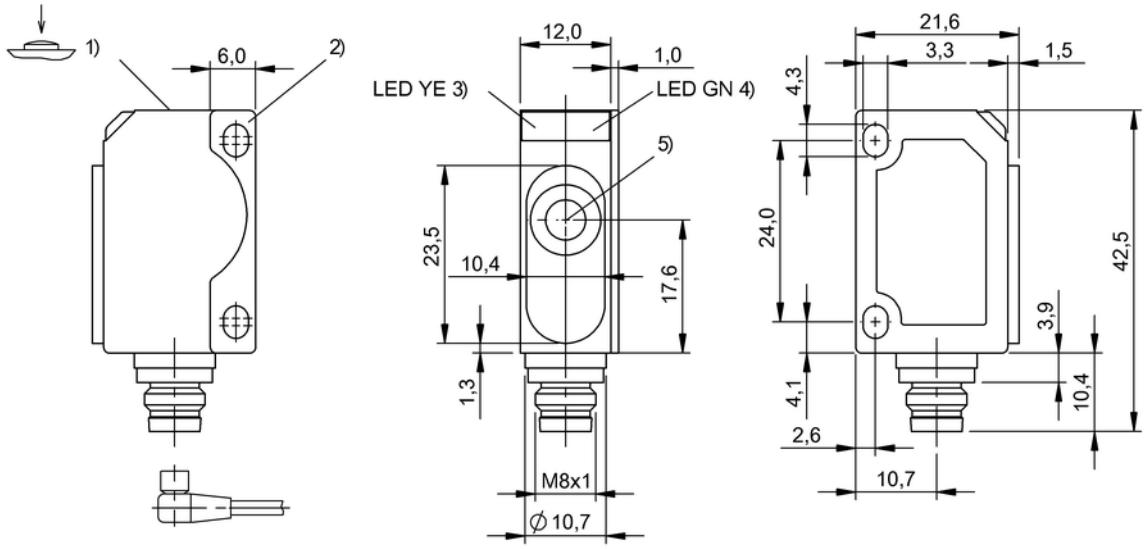

Characteristic data

Design	Block, 90° connection
Short-circuit protected	yes
Protected against polarity reversal	yes
Setting	Output curve rise/fall, Characteristic curve window, Key disable on/off, Factory setting (reset)

Electrical data

Operating voltage	20...30 V DC
Rated operating voltage Ue DC	24.0 V
Analogue output	Analog U
Output characteristic	Linear rising/falling
Response time max.	24 ms
Ultrasonic frequency	380 kHz
Synchronisation	ext., any number of sensors

Mechanical data

Resolution	0,056 mm
Connector type	M8x1-S75
Sensing surface material	PU foam, epoxy resin, glass
Housing material	Messing, PBT
Resolution	0,056 mm
Repeat accuracy	±0.15 %
Operating temperature min.	-25 °C
Operating temperature max.	+70 °C
Cover material	PBT
Range min.	20 mm
Range max.	250 mm
Temperature compensation	yes

Basic data

Enclosure Type per IEC 60529	IP67

CE

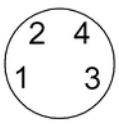

BUS R06K1-XA-02/015-S75G
Ordering code: BUS004K

Ultrasonic sensor
R06

Connector, M8x1-S75
Working range 20...250 mm
0...10 V

