E89066

Mounting tube

LED-Tower/Pole/300mm

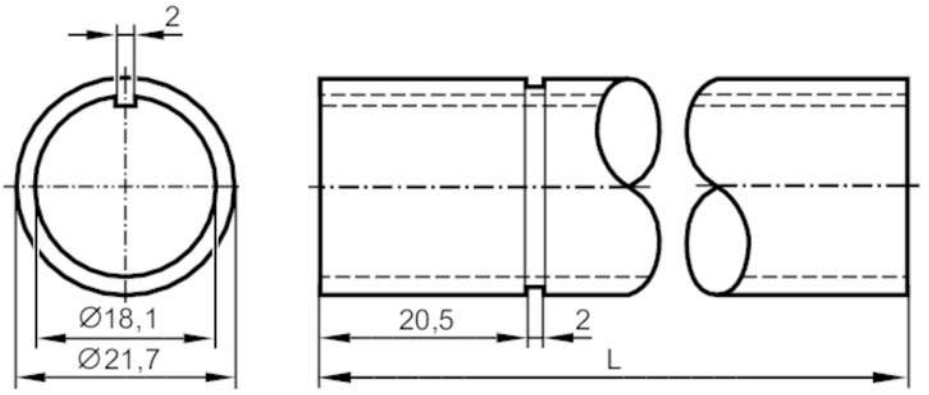

L: 300 mm

Mechanical data		
Weight	[g]	91.2
Dimensions	[mm]	Ø 21.7 / L = 300
Materials		aluminium black
Length L	[mm]	300

Accessories	
Accessories (optional)	mounting base:, E89060
	wall bracket:, E89061
	Mounting adapter:, E89063

Remarks	
Pack quantity	1 pcs.

Diagrams and graphs

base mounting

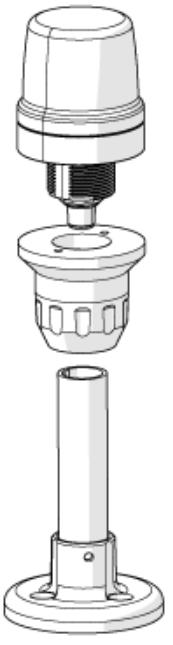

E89066

Mounting tube

LED-Tower/Pole/300mm

wall mounting

