Preparation of compressed air → Maintenance units and components

Filter pressure regulator, Series AS2-FRE

► G 1/4 - G 3/8 ► filter porosity: 5 µm ► lockable ► with pressure gauge ► ATEX certified



00119372

ATEX	II 2G2D T4 X
Maintenance Unit	1-in-1, Can be assembled into blocks
Parts	Filter, Pressure controller
Regulator type	Diaphragm-type pressure regulator
Regulator function	with relieving air exhaust
Lock type	with padlock
Pressure supply	single
Installation location	vertical
Ambient temperature min./max.	-10 °C / +50 °C
Medium temperature min./max.	-10 °C / +50 °C
Working pressure min./max.	See table below
Adjustment range min./max.	See table below
Medium	Compressed air
Filter element	exchangeable
Filter reservoir volume	28 cm^3
Condensate drain	See table below
Materials:	
Housing	Polyamide
Threaded bushing	Die cast zinc
Cover	Acrylonitrile butadiene styrene
Seal	Acrylonitrile Butadiene Rubber
Filter insert	Polyethylene

Technical Remarks
■ The pressure dew point must be at least 15 °C under ambient and medium temperature and may not exceed 3 °C.
■ max. particle count as per ISO 8573-4 at the outlet: 10 mg/m^3

Preparation of compressed air → Maintenance units and components

Filter pressure regulator, Series AS2-FRE

► G 1/4 - G 3/8 ► filter porosity: 5 µm ► lockable ► with pressure gauge ► ATEX certified

	Port	Qn	Working pressure min./max.	Adjustment range min./max.	Condensate drain	Note	Part No.
		[l/min]	[bar]	[bar]			
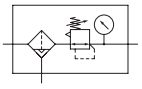	G 1/4	2100	1.5 / 16	0.5 / 8	semi-automatic, open without pressure	1); 3)	**R412006200**
	G 1/4	2100	1.5 / 16	0.5 / 8	fully automatic, open without pressure	1); 3)	**R412006201**
	G 1/4	2100	0 / 16	0.5 / 8	fully automatic, closed without pressure	1); 3)	**R412006202**
	G 1/4	2100	1.5 / 16	0.5 / 8	semi-automatic, open without pressure	2)	**R412006206**
	G 1/4	2100	1.5 / 16	0.5 / 8	fully automatic, open without pressure	2)	**R412006207**
	G 1/4	2100	0 / 16	0.5 / 8	fully automatic, closed without pressure	2)	**R412006208**
	G 1/4	2100	1.5 / 16	0.5 / 10	semi-automatic, open without pressure	1); 3)	R412006196
	G 1/4	2100	1.5 / 16	0.5 / 10	fully automatic, open without pressure	1); 3)	R412006197
	G 1/4	2100	0 / 16	0.5 / 10	fully automatic, closed without pressure	1); 3)	R412006198
	G 3/8	2600	1.5 / 16	0.5 / 8	semi-automatic, open without pressure	1); 3)	**R412006209**
	G 3/8	2600	1.5 / 16	0.5 / 8	fully automatic, open without pressure	1); 3)	**R412006210**
	G 3/8	2600	0 / 16	0.5 / 8	fully automatic, closed without pressure	1); 3)	**R412006211**
	G 3/8	2600	1.5 / 16	0.5 / 8	semi-automatic, open without pressure	2)	**R412006215**
	G 3/8	2600	1.5 / 16	0.5 / 8	fully automatic, open without pressure	2)	**R412006216**
	G 3/8	2600	0 / 16	0.5 / 8	fully automatic, closed without pressure	2)	**R412006217**
	G 3/8	2600	1.5 / 16	0.5 / 10	semi-automatic, open without pressure	2)	R412006212
	G 3/8	2600	1.5 / 16	0.5 / 10	fully automatic, open without pressure	2)	R412006213
	G 3/8	2600	0 / 16	0.5 / 10	fully automatic, closed without pressure	2)	R412006214

Part No.	Weight
	[kg]
R412006200	0.394
R412006201	0.437
R412006202	0.437
R412006206	0.609
R412006207	0.661
R412006208	0.661
R412006196	0.394
R412006197	0.437
R412006198	0.437
R412006209	0.437
R412006210	0.437
R412006211	0.437

1) Reservoir: Polycarbonate
2) Reservoir: Die cast zinc
3) Protective guard: Polyamide
Nominal flow Qn at 6.3 bar and Δp = 1 bar.

Preparation of compressed air → Maintenance units and components

Filter pressure regulator, Series AS2-FRE

► G 1/4 - G 3/8 ► filter porosity: 5 µm ► lockable ► with pressure gauge ► ATEX certified

Part No.	Weight
	[kg]
R412006215	0.596
R412006216	0.648
R412006217	0.648
R412006212	0.596
R412006213	0.648
R412006214	0.648

1) Reservoir: Polycarbonate
2) Reservoir: Die cast zinc
3) Protective guard: Polyamide
Nominal flow Qn at 6.3 bar and Δp = 1 bar.

Flow rate characteristic

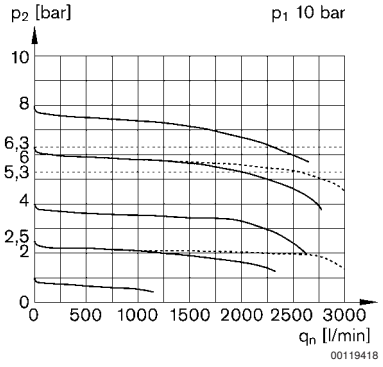

p1 = working pressure; p2 = secondary pressure; qn = nominal flow

Filter pressure regulator, Series AS2-FRE

► G 1/4 - G 3/8 ► filter porosity: 5 µm ► lockable ► with pressure gauge ► ATEX certified

Dimensions

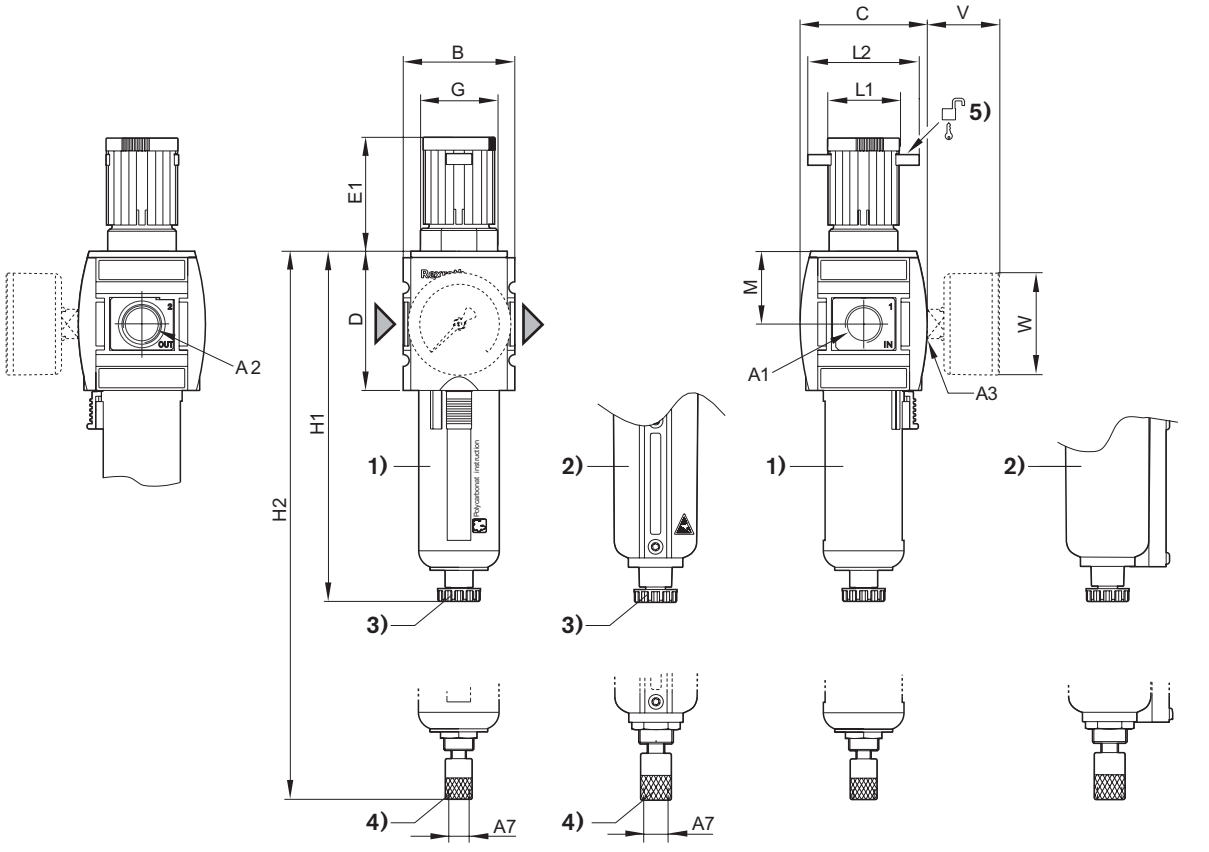

1) Plastic reservoir and protective guard with window
2) Metal reservoir
3) Semi-automatic condensate drain
4) Fully automatic condensate drain
5) Mounting option for padlocks; max. shackle Ø 8

A1	A2	A3	A7	B	C	D	E1	G	H1	H2	L1	L2
G 1/4	G 1/4	G 1/4	G 1/8	52	59	65	57.9	M36x1,5	163.5	--	34	54
G 1/4	G 1/4	G 1/4	G 1/8	52	59	65	57.9	M36x1,5	--	180.5	34	54
G 3/8	G 3/8	G 1/4	G 1/8	52	59	65	57.9	M36x1,5	163.5	--	34	54
G 3/8	G 3/8	G 1/4	G 1/8	52	59	65	57.9	M36x1,5	--	180.5	34	54

A1	M	V	W
G 1/4	34	37	50
G 1/4	34	37	50
G 3/8	34	37	50
G 3/8	34	37	50