268 HANDHELD CASES
292 UNIVERSAL ENCLOSURES
318 HEAVY DUTY AND ELECTRICAL ENCLOSURES
342 DESKTOP AND INSTRUMENT CASES
348 DEVELOPMENT BOARD ENCLOSURES
367 ROOM SENSOR ENCLOSURES
370 CUSTOM SIZED ENCLOSURES

4000 series panel lid cases

Product overview

ABS boxes with recessed lid, designed for ease of customisation, available in three sizes.

- Aluminium lid mounted by four M3 machine screws
- Brass inserts in base for repeated removal of the lid
- Polished finish for ease of cleaning
- Rubber feet provided as standard
- Both the lid and box have excellent properties for machining
- Integral mounting guides to accept 1.6mm PCBs
- 4000 series has been designed to meet the requirements of IP54

BIM4003

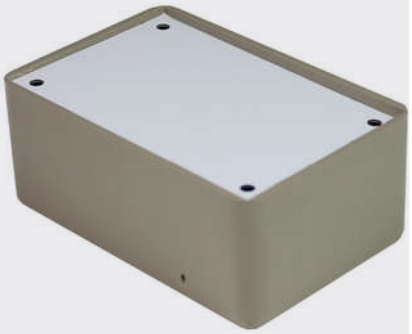



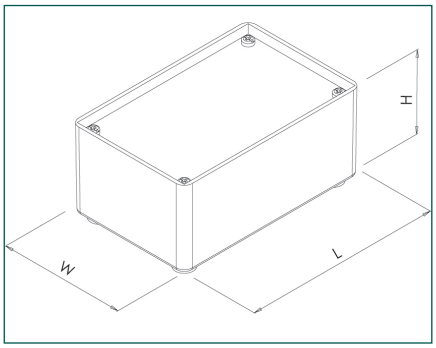

SPECIFICATION	
Materials	Base high impact ABS Lid 1mm aluminium
Operating temperature	Resistant to temperatures of up to 80°C
Protection class	4000 series has been designed to meet the requirements of IP54
Standard colours	Base: Grey (GY), black (BLK) Aluminium lid
Standard unit includes	Base and aluminium lid 4x M3 machine screws 4x rubber feet
Options	PCB adaptors for horizontal mounting

ALUMINIUM LID GREY	ALUMINIUM LID BLACK	LENGTH	WIDTH	HEIGHT
BIM4003-GY/PG	BIM4003-BLK/PG	85mm	56mm	35mm
BIM4004-GY/PG	BIM4004-BLK/PG	111mm	71mm	48mm
BIM4005-GY/PG	BIM4005-BLK/PG	161mm	96mm	59mm

KEY FEATURES

Brass inserts | Accepts 1.6mm PCB's | Base moulded in ABS





+44 (0)1638 716101 | sales@camdenboss.com | www.camdenboss.com

We operate a constant improvement policy, our products are subject to change without notice.

Vers 1

bsi. ISO 9001 Quality Management FM 28614 ISO 14001 Environmental Management EMS 613558