Brand of NTN corporation

Technical data

ESFCE211

Bearing units



Grey cast housing, radial insert ball bearing with eccentric locking collar, single lip seal

KIT CONTENT

ES211G2, FCE211

VISUAL (S)

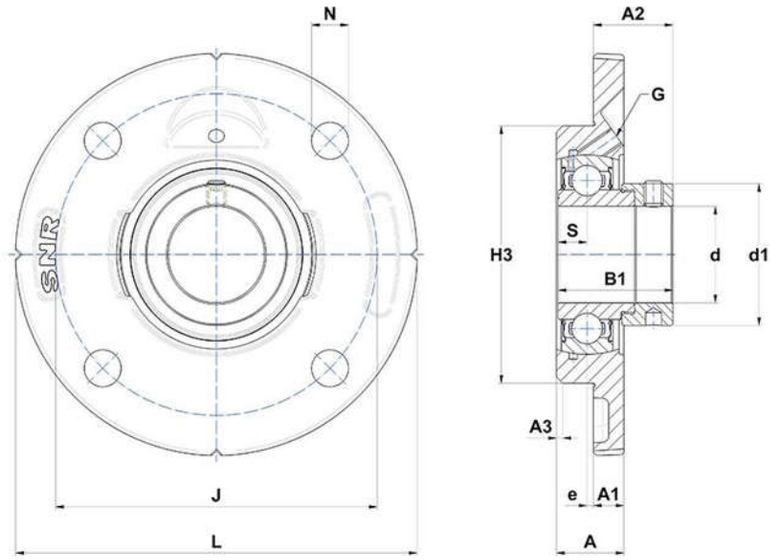

PRODUCT DEFINITION

Brand	SNR
A - Housing height	27,5 mm
A1 - Housing foot height / flange height	15 mm
A2 - Total height from mounting surface	36,4 mm
A3 - Centering depth / chamfer dimension	3 mm
B - Width of Inner Ring	32,5 mm

PRODUCT DEFINITION	
B1 - Overall width Inner Ring	48,4 mm
d - Shaft diameter	55 mm
d1 - Outer dia of eccent. Lock. collar / nut of adapter sleeve	74,5 mm
G - Grease fitting	M6x1
H3 - Centering dia	125 mm
J - Mounting holes distance	150 mm
L - Housing width / diameter	185 mm
N - Mounting hole dimension	18 mm
S - Distance front side/bearing centre	12 mm

PRODUCT PERFORMANCE	
C - Dynamic load rating	43550000 mN
C0 - Static load rating	29200000 mN
Operating temperature min.	253,15 °K
Operating temperature max.	373,15 °K

OTHER FEATURES	
Mass	2,88 kg
Recommended tightening torque for set screw	22 N-m