WORLD'S LEADING MANUFACTURER
OF HAZARDOUS AREA PORTABLE
& TEMPORARY LIGHTING

ATEX Torch

Zones: 1, 2, 21 and 22





Product Overview

The ATEX Safety Torch is a reliable, simple and cost effective portable light and is available with a straight or right-angle body style and vacuum or xenon bulbs and is CE marked to the ATEX directive and IECEx certified for safe use in Zones 1 and 2 potentially explosive gas, vapour and mist atmosphere, where a T6 or T4 class permits, and Zones 21 and 22 dust atmospheres, with certified maximum surface temperatures of 65°C or 95°C.

T4 models give outstanding light output using advanced, long life xenon bulbs, set in a high quality parabolic reflector, coupled with alkaline cell approval, giving up to 12 hours of light output. Alternatively T6 allows use in any Zone 1 or 2 atmospheres, with optimum light output in this temperature class, and a 5 hour duration.

The compact torch design has a high-grip ergonomic form with easy single-handed switching, even with gloved hands. The torch body offers high strength, and proven impact resistance even at sub zero temperatures, using carefully selected thermoplastic resins with excellent chemical resistance. Additionally, the rubber armoured lens ring and end cap give enhanced grip and shock protection. The lens is scratch and chemical resistant.

The torch is sealed dust tight and protected from water immersion, with a certified IP67 enclosure. Right angle models incorporate a replaceable high strength thermoplastic belt clip for hands free use. Both models allow straightforward battery and bulb replacement, a spare bulb is fitted in the bulbholder for quick and convenient replacement. All models are supplied with wrist straps and clip rings.

Features & Benefits

- T6 and T4 models
- Simple, robust design
- Ultimate light output
- High energy alkaline cell certified
- ATEX explosive gas and dust approval
- IECEx Scheme certified

Certifications

0598

Technical Specification

Product Reference		**TS-26B**	**TR-26B**	**TS-24B**	**TR-24B**
Product Description		Safety Torch, Primary Cell Powered, Straight or Right-Angle			
		Straight	Right-Angle	Straight	Right-Angle
Code		II 2GD Ex eb ib IIB T6 Gb Ex tb IIIC T65°C Db (-10°C ≤ Ta ≤ +40°C)	II 2GD Ex eb ib IIB T6 Gb Ex tb IIIC T65°C Db (-20°C ≤ Ta ≤ +40°C)	II 2GD Ex eb ib IIB T4 Gb Ex tb IIIC T95°C Db (-10°C ≤ Ta ≤ +40/55°C)	II 2GD Ex eb ib IIB T4 Gb Ex tb IIIC T95°C Db (-20°C ≤ Ta ≤ +40/55°C)
Type of Protection		Increased safety, intrinsic safety			
Area of Class (Gas)		Zones 1 & 2 Gas Groups IIA, IIB			
Max Surface Temp (Gas)		T6		T4	
Ambient Temp. (Gas)		-10°C to +40°C	-20°C to +40°C	-10°C to +40°C/+55°C*	-20°C to +40°C/+55°C*
Area of Class (Dust)		Zones 21 and 22 Dust Groups IIIA, IIIB, IIIC			
Temp. Class (Dust)		65°C		95°C	
Certificate		BAS02ATEX2220X / IECEx BAS 15.0033X			
Enclosure		Impact Resistant Thermoplastic, Electrostatic non-hazardous			
Lens		Polycarbonate	Toughened Glass	Polycarbonate	Toughened Glass
Beam Type		Medium Spot			
Light Source:	**Part No.**	**TP-406**		**TP-404**	
	Bulb Type	Vacuum Filament		Xenon Filled Filament	
	Rating	2.4V, 0.5A		2.4V, 0.7A	
	Output	11.4 lm (at nom voltage)		16 lm (at nom voltage)	
	Life	15 hrs		50 hrs	
	Spare	**TP-406**		**TP-404**	
Power Source:	**Part No.**	2 x T-20 (R20)		2 x H-20 (LR20)	
	Type	R20 Primary Cells to IEC60086		R20/LR20 Primary Cells to IEC60086	
	Volts	2 x 1.5v		2 x 1.5v	

Light Duration	Up to 5 hrs		Up to 12 hrs	
Ingress Protection	IP67			
Weight (excl. cells)	150g	190g	150g	190g
Weight (inc. cells)	350g	390g	450g	490g

- *Dependent on battery selection.
- All information has been gathered under laboratory conditions, the user must regard the values given as approximate.
- Changes may be made to the above specification without notification, details are available on request.

Product Dimensions

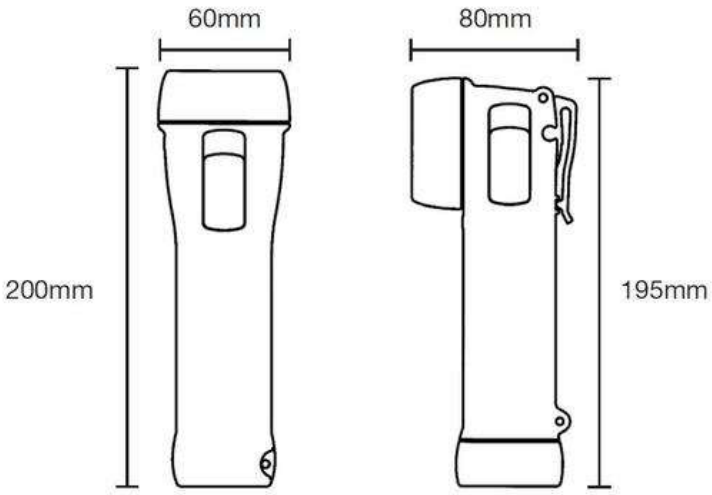

Light Output

- **TS-26B & TR-26B -** 1.2W Beam (approx 5°) - Peak luminous intensity at 5m **170lux**
- **TS-24B & TR-24B -** 1.7W Beam (approx 5°) - Peak luminous intensity at 5m **230lux**

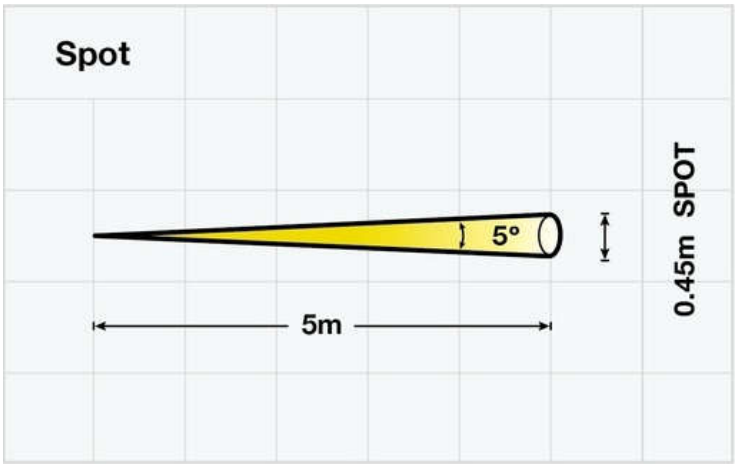

Version: SL013 DF528 Issue 13

Wolf®
Wolf Safety Lamp Company, Saxon Road Works, Sheffield, S8 0YA, UK
• **T:** +44 (0) 114 255 1051 • **F:** +44 (0) 114 255 7988
• **E:** info@wolfsafety.com • **www.wolfsafety.com**