Brand of NTN corporation

Technical data

ESPAE202

Bearing units

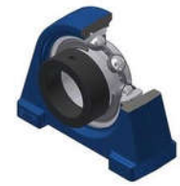

Grey cast housing, radial insert ball bearing with eccentric locking collar, single lip seal

KIT CONTENT

ES.202.G2, PAE203

VISUAL (S)

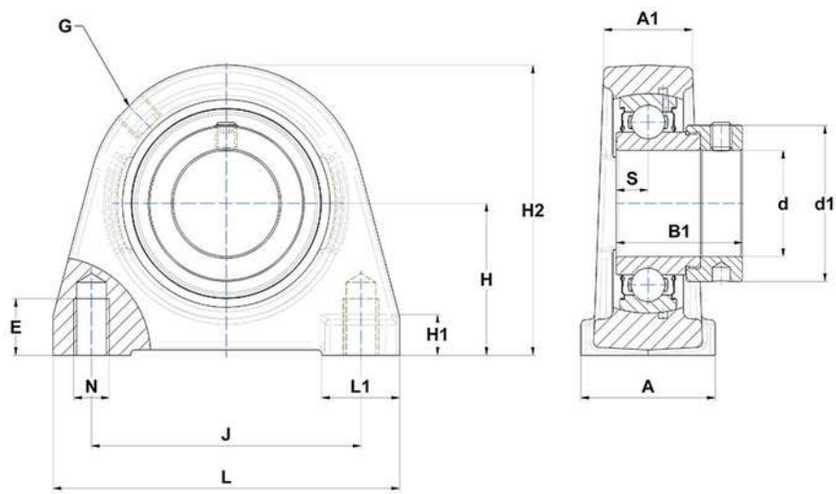

PRODUCT DEFINITION

Brand	SNR
A - Housing width	30 mm
A1 - Housing top width	18 mm
B - Width of Inner Ring	19,1 mm
d - Shaft diameter	15 mm
d1 - Outer dia of eccent. Lock. collar / nut of adapter sleeve	27,2 mm

PRODUCT DEFINITION	
E - Mounting hole thread depth	10 mm
G - Grease fitting	M6x1
H - Distance mounting base to centerline spheric. seating diam.	30,2 mm
H1 - Housing foot height	9 mm
H2 - Housing height	57 mm
J - Mounting holes distance	47 mm
L - Housing length	63 mm
L1 - Housing foot length	17,5 mm
N - Mounting hole dimension	M8
S - Distance front side/bearing centre	6,5 mm

PRODUCT PERFORMANCE	
C - Dynamic load rating	9550000 mN
C0 - Static load rating	4780000 mN
Operating temperature min.	253,15 °K
Operating temperature max.	373,15 °K

OTHER FEATURES	
Mass	0,43 kg
Recommended tightening torque for set screw	5.5 N-m