Product data sheet
Characteristics

XSAV01801
inductive sensor XSAV - M30 - Sn10mm - 6..150c/mn - 24..240VAC/DC - cable 2m



Main

Range of product	OsiSense XS
Series name	Application
Sensor type	Inductive proximity sensor
Device application	Rotation monitoring
Sensor name	XSA
Sensor design	Cylindrical M30
Size	81 mm
Body type	Fixed
Detector flush mounting acceptance	Flush mountable
Material	Metal
Enclosure material	Nickel plated brass
Type of output signal	Discrete
Wiring technique	2-wire
[Sn] nominal sensing distance	10 mm
Discrete output function	1 NC
Output circuit type	AC/DC
Electrical connection	Cable
Cable length	2 m
[Us] rated supply voltage	24...240 V AC 50/60 Hz 24...210 V DC
Switching capacity in mA	5...200 mA DC 5...350 mA AC
IP degree of protection	IP67 conforming to IEC 60529

Complementary

Thread type	M30 x 1.5
Detection face	Frontal
Front material	PPS
Adjustable frequency range	6...150 cyc/mn
Operating zone	0...8 mm
Differential travel	3...15% of Fr
Repeat accuracy	3% of Sr
Cable composition	2 x 0.34 mm²
Wire insulation material	PvR
Status LED	1 LED red for output state
Supply voltage limits	20...264 V AC/DC
Residual current	<= 1.5 mA for open state
Switching frequency	<= 100 Hz
Voltage drop	<= 5.7 V at closed state
Run-up delay at power-up	0 s without
Marking	CE
Threaded length	57 mm
Height	30 mm
Length	81 mm
Product weight	0.3 kg

The information provided in this documentation contains general descriptions and/or technical characteristics of the performance of the products contained herein.
This documentation is not intended as a substitute for and is not to be used for determining suitability or reliability of these products for specific user applications.
It is the duty of any such user or integrator to perform the appropriate and complete risk analysis, evaluation and testing of the products with respect to the relevant specific application or use thereof.
Neither Schneider Electric Industries SAS nor any of its affiliates or subsidiaries shall be responsible or liable for misuse of the information contained herein.

Environment

Product certifications	CSA CCC UL
Ambient air temperature for operation	-25...70 °C

Offer Sustainability

Sustainable offer status	Green Premium product
RoHS (date code: YYWW)	Compliant - since 1136 - Schneider Electric declaration of conformity Schneider Electric declaration of conformity
REACh	Reference not containing SVHC above the threshold
Product environmental profile	Available Product Environmental
Product end of life instructions	Available End Of Life Manual

Contractual warranty

Warranty period	18 months

Dimensions

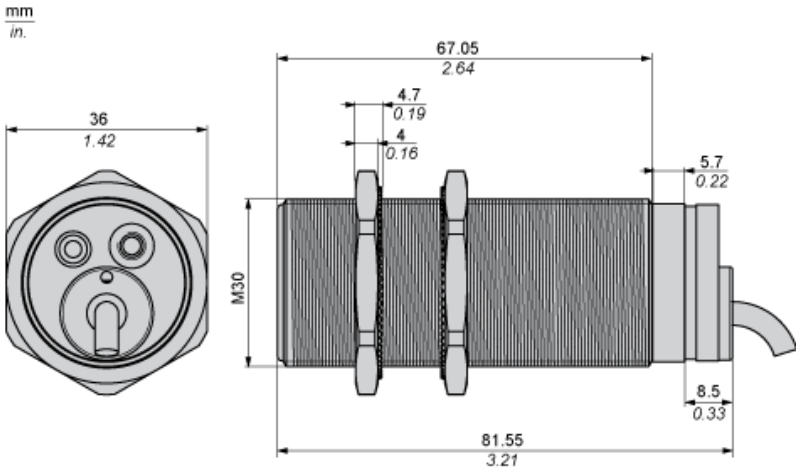

(1) LED

Minimum Mounting Distances

Side by side

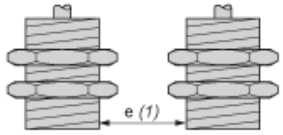

e (1) 20 mm/0.79 in
≥

Face to face

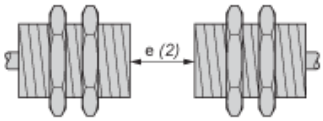

e (2) 120 mm/4.72 in
≥

Facing a metal object

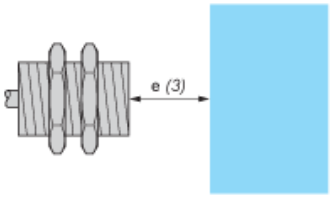

e (3) 30 mm/1.18 in.
≥

Wiring Schemes

2-wire AC or DC

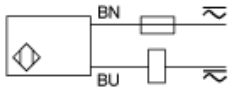

BU : Blue
BN : Brown

Performance Curves

Standard Steel Target : 30x30x1 mm

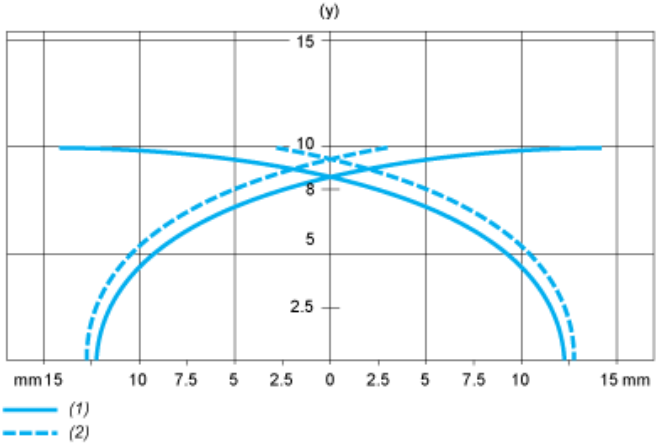

(1) Pick-up points
(2) Drop-out points (object approaching from the side)
(y) Sensing distance in mm