TI01600C/07/EN/01.21
71526116
2021-04-30

Technical Information
Memosens CPS16E

pH/ORP sensor for standard applications in process technology and environmental engineering



Digital with Memosens 2.0 technology

Application

Long-term monitoring or limit control in processes with stable process conditions:

- Chemical processes
- Pulp and paper industry
- Incinerator plants and gas scrubbers
- Mining
- Wastewater

With ATEX, IECEx, CSA C/US, NEPSI, Japan Ex and INMETRO approvals for use in hazardous areas Zone 0, Zone 1 and Zone 2.

Your benefits

- Simultaneous measurement of pH, ORP and rH value (in rH mode)
- Platinum electrode for measuring reference impedance
- Low-maintenance and robust thanks to large PTFE ring junction
- Can be used at pressures up to 17 bar (246.5 psi) (absolute)
- Process glass also for very alkaline applications
- Long service life thanks to poison-resistant reference with ion trap
- Integrated NTC 30K temperature sensor for effective temperature compensation
- Glass breakage and blockage detection by measuring:
  - Resistance of glass membrane
  - Reference impedance

Other advantages provided by Memosens technology

- Maximum process safety thanks to non-contact, inductive signal transmission
- Data security thanks to digital data transmission
- Very easy to use as sensor data are saved in the sensor
- Predictive maintenance can be performed by recording sensor load data in the sensor

Endress+Hauser
People for Process Automation

Function and system design

Measuring principle

pH measurement
The pH value is used as a unit of measurement for the acidity or alkalinity of a medium. The membrane glass of the electrode delivers an electrochemical potential that depends on the pH value of the medium. This potential is generated by the selective accumulation of H^+ ions on the outer layer of the membrane. As a result, an electrochemical boundary layer with an electrical potential difference forms at this point. An integrated Ag/AgCl reference system serves as the required reference electrode.
The measured voltage is converted to the corresponding pH value using the Nernst equation.

ORP measurement
The ORP potential is a unit of measurement for the state of equilibria between oxidizing and reducing components of a medium. The ORP is measured using a platinum or gold electrode. Similar to pH measurement, an integrated Ag/AgCl reference system is used as a reference electrode.

rH measurement
The rH value is defined as the negative logarithm of partial pressure of hydrogen in a solution. The pH value and ORP value of a solution must be measured simultaneously to calculate the rH value. The value is calculated using the following equation:

$rH = 2 \cdot (mV/S) + 2\ pH$

pH	Measured pH value
mV	Measured ORP value in mV + 207 mV (Ag/AgCl system)
S	Slope of pH electrode

The rH value is an indicator of the oxidation or reducing power of a process solution. The rH scale runs from 0 to 42.

rH values	Process medium
0 to 9	Strong reducing power
9 to 17	Weak reducing power
17 to 25	Undetermined medium
25 to 34	Weak oxidizing power
34 to 42	Strong oxidizing power

Measuring system

A complete measuring system comprises:
- pH/ORP sensor CPS16E
- Transmitter, e.g. Liquiline CM44x
- Memosens data cable CYK10 or CYK20
- Assembly
  - Immersion assembly, e.g. Dipfit CPA111
  - Flow assembly, e.g. Flowfit CPA250
  - Retractable assembly, e.g. Cleanfit CPA871
  - Permanent installation assembly, e.g. Unifit CPA842

Additional options are available depending on the application:
Automatic cleaning and calibration system, e.g. Liquiline Control CDC90

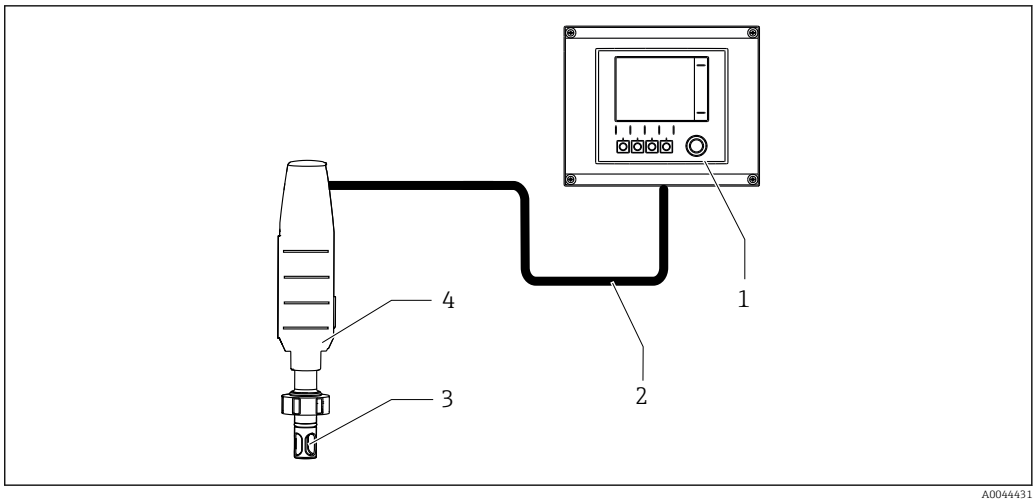

1 Example of a measuring system

1 Transmitter Liquiline CM44x
2 Memosens data cable CYK10
3 pH/ORP sensor CPS16E
4 Permanent installation assembly CPA842

Communication and data processing

Communication with the transmitter

Always connect digital sensors with Memosens technology to a transmitter with Memosens technology. Data transmission to a transmitter for analog sensors is not possible.

Digital sensors can store measuring system data in the sensor. These include the following:
- Manufacturer data
  - Serial number
  - Order code
  - Date of manufacture
- Calibration data
  - Calibration date
  - Slope at 25 °C (77 °F)
  - Zero point at 25 °C (77 °F)
  - Offset of integrated temperature sensor
  - Offset of ORP measurement
  - Number of calibrations
  - Calibration history
  - Serial number of the transmitter used to perform the last calibration or adjustment
- Application data
  - Temperature application range
  - pH application range
  - ORP application range
  - Date of initial commissioning
  - Maximum temperature value
  - Hours of operation under extreme conditions
  - Number of sterilizations
  - CIP counter

The data listed above can be displayed with Liquiline CM42, CM44x, and Memobase Plus CYZ71D.

Dependability

Reliability

Easy handling

Sensors with Memosens technology have integrated electronics that store calibration data and other information (e.g. total hours of operation or operating hours under extreme measuring conditions). Once the sensor has been connected, the sensor data are transferred automatically to the transmitter and used to calculate the current measured value. As the calibration data are stored in the sensor, the sensor can be calibrated and adjusted independently of the measuring point. The result:
- Easy calibration in the measuring lab under optimum external conditions increases the quality of the calibration.
- Pre-calibrated sensors can be replaced quickly and easily, resulting in a dramatic increase in the availability of the measuring point.
- Thanks to the availability of the sensor data, maintenance intervals can be accurately defined and predictive maintenance is possible.
- The sensor history can be documented on external data carriers and evaluation programs, e.g. Memobase Plus CYZ71D,.
- The saved application data of the sensor can be used to determine the continued use of the sensor in a targeted manner.

Integrity

Data security thanks to digital data transmission

Memosens technology digitizes the measured values in the sensor and transmits the data to the transmitter via a non-contact connection that is free from potential interference. The result:
- If the sensor fails or there is an interruption in the connection between the sensor and transmitter, this is reliably detected and reported.
- The availability of the measuring point is reliably detected and reported.

Safety

Maximum process safety
With inductive transmission of the measured value using a non-contact connection, Memosens guarantees maximum process safety and offers the following benefits:
- All problems caused by moisture are eliminated:
  - No corrosion at the connection
  - Measured values cannot be distorted by moisture
- The transmitter is galvanically decoupled from the medium. Issues concerning "symmetrical high-impedance" or "asymmetry" or the type of impedance converter are a thing of the past.
- Electromagnetic compatibility (EMC) is guaranteed by screening measures for the digital transmission of measured values.
- Intrinsically safe electronics mean operation in hazardous areas is not a problem. Complete flexibility thanks to individual Ex approvals for all components, such as sensors, cables and transmitters.

Input

Measured variable
- pH value
- ORP
- rH value
- Temperature

Measuring range

ORP: −1 500 to 1 500 mV

Application A
- pH: 1 to 12
- Temperature: −15 to 80 °C (5 to 176 °F)

Application B
- pH: 0 to 14
- Temperature: 0 to 135 °C (32 to 275 °F)

Pay attention to the operating conditions in the process.

Power supply

Electrical connection

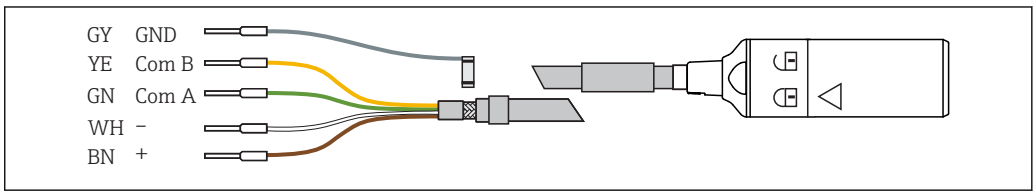

2 *Measuring cable CYK10 or CYK20*

▶ Connect the Memosens measuring cable, e.g. CYK10 or CYK20 to the sensor.

For further information on cable CYK10, see BA00118C

Performance characteristics

Reference system

Ag/AgCl reference lead with ion trap, bridging electrolyte: gel KCl, 3M, AgCl-free

Installation

Orientation

- Do not install the sensors upside-down.
- The installation angle from the horizontal must be at least 15°.

An installation angle <15° is not permitted, as otherwise an air bubble will form. Contact between the membrane glass and the reference lead will then no longer be guaranteed.

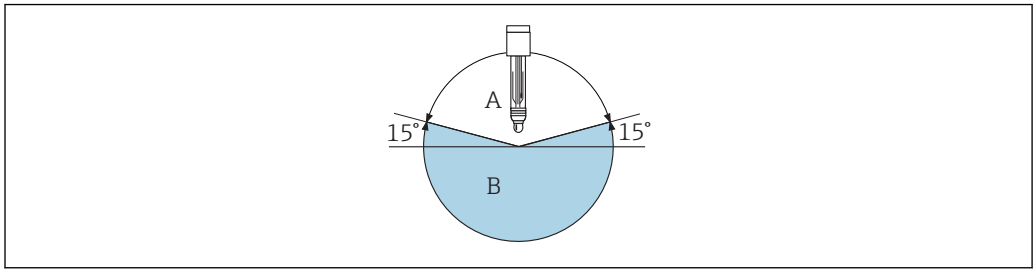

3 Installation angle at least 15° from the horizontal

A Permitted orientation
B Forbidden orientation

Installation instructions

For detailed installation instructions for the assembly: refer to the Operating Instructions of the assembly used.

1. Before screwing in the sensor, make sure the assembly thread, the O-rings and the sealing surface are clean and undamaged and that the thread runs smoothly.
2. Screw in the sensor and tighten by hand with a torque of 3 Nm (2.21 lbf ft) (specifications only apply if installing in Endress+Hauser assemblies).

For detailed information on removing the moistening cap, see BA02142C

Environment

Ambient temperature range

NOTICE

Risk of damage from frost!

▶ Do not use the sensor at temperatures below .

Storage temperature

0 to 50 °C (32 to 122 °F)

Degree of protection

IP 68 (10 m (33 ft) water column, 25 °C (77 °F), 45 days, 1 M KCl)

Electromagnetic compatibility (EMC)

Interference emission and interference immunity as per:
- EN 61326-1:2013
- EN 61326-2-3:2013
- NAMUR NE21:2017

Process

Process temperature range

Application A:	−15 to 80 °C (5 to 176 °F)
Application B:	0 to 135 °C (32 to 275 °F)

Process pressure range

⚠ CAUTION

Pressurization of sensor due to prolonged use under increased process pressure
Possibility of sudden rupture and injury from glass splinters!
- ▶ Avoid fast heating of these pressurized sensors if they are used under reduced process pressure or under atmospheric pressure.
- ▶ When handling these sensors, always wear protective goggles and appropriate protective gloves.

Applications A and B: 0.8 to 17 bar (11.6 to 246.5 psi) absolute

Conductivity

Reference system TA: Minimum 50 µS/cm (minimized flow; pressure and temperature must remain constant)

Pressure/temperature ratings

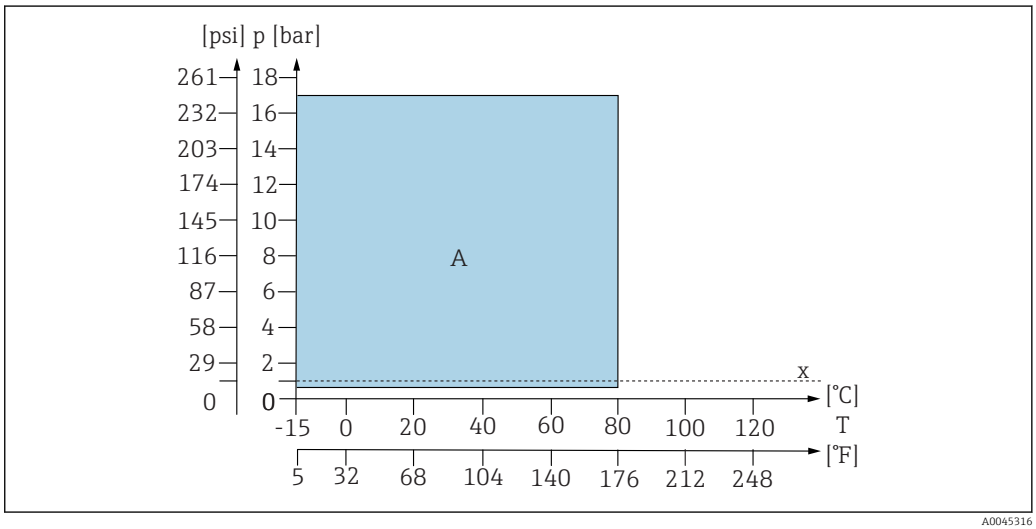

4 *Pressure/temperature ratings*

A Application A
x Atmospheric pressure

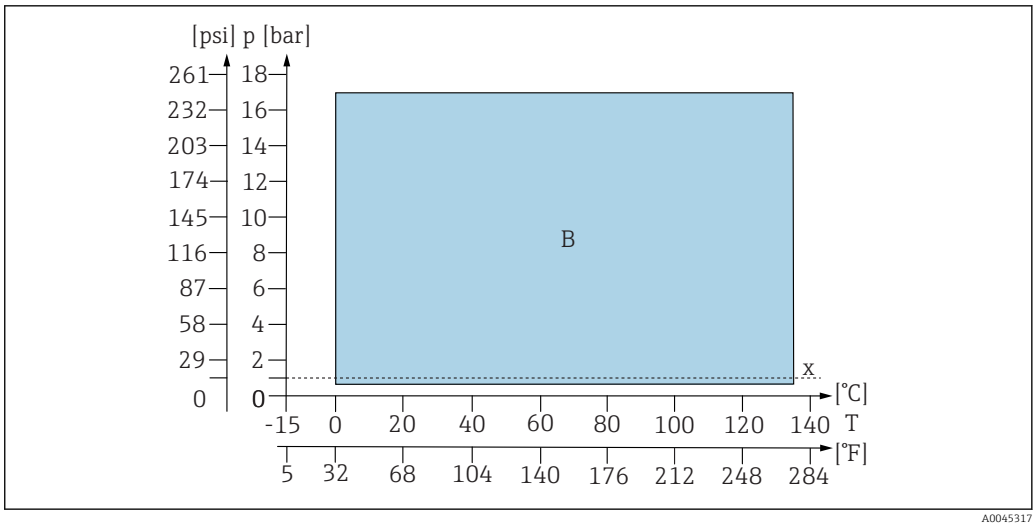

5 *Pressure/temperature ratings*

B Application B
x Atmospheric pressure

Mechanical construction

Design, dimensions

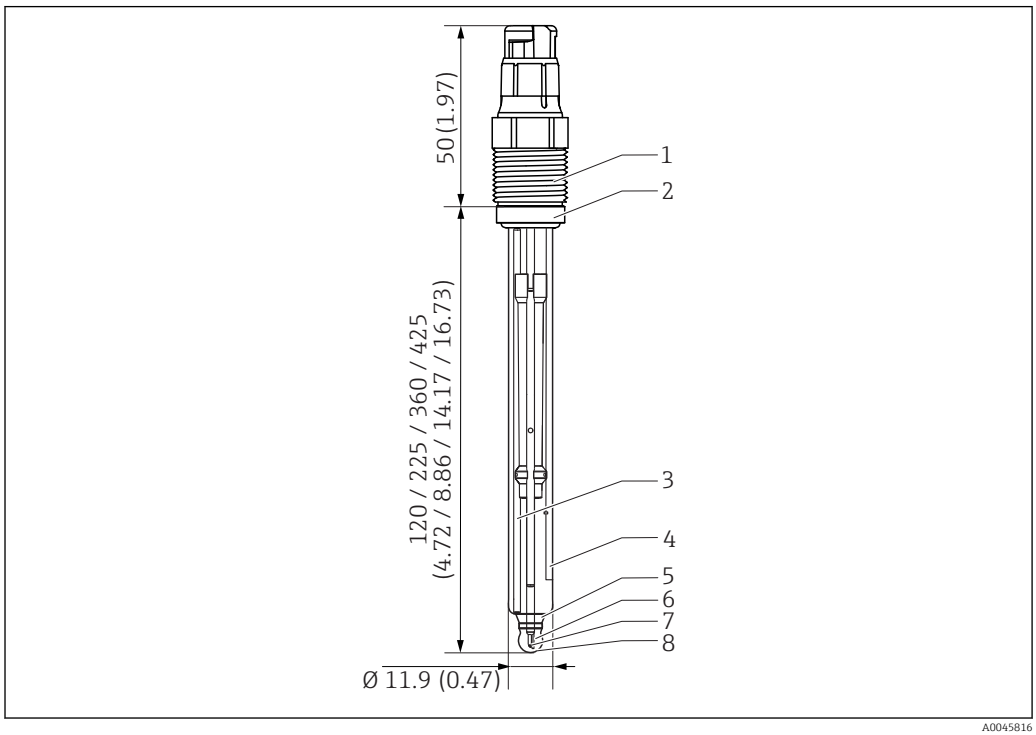

6 *CPS16E with ion trap. Engineering unit: mm (in)*

1 *Memosens plug-in head with process connection*
2 *O-ring with thrust collar*
3 *Reference with ion trap*
4 *ORP measuring element*
5 *Junction*
6 *Temperature sensor*
7 *Ag/AgCl reference lead*
8 *pH glass membrane*

Weight

Installed length	120 mm (4.72 in)	225 mm (8.86 in)	360 mm (14.17 in)	425 mm (16.73 in)
Weight	40 g (1.4 oz)	60 g (2.1 oz)	90 g (3.2 oz)	100 g (3.5 oz)

Materials

Sensor shaft	Glass to suit process
pH membrane glass	Type A, B
Metal lead	Ag/AgCl
Open aperture	Ring-shaped PTFE junction, sterilizable
ORP measuring element	Platinum
O-ring	FKM
Process coupling	PPS fiber-glass reinforced
Nameplate	Ceramic metal oxide

Temperature sensor

NTC 30K

Plug-in head

Memosens plug-in head for digital, non-contact data transmission, pressure resistance 16 bar (232 psi) (relative)

Process connections

Pg 13.5

Certificates and approvals

CE mark

The product meets the requirements of the harmonized European standards. As such, it complies with the legal specifications of the EU directives. The manufacturer confirms successful testing of the product by affixing to it the CE mark.

Ex approval

ATEX
II 1G Ex ia IIC T3/T4/T6 Ga

IECEx
Ex ia IIC T3/T4/T6 Ga

NEPSI
Ex ia IIC T3/T4/T6 Ga

CSA C/US
- IS CL I DIV 1, GP A, B, C, D Ex ia IIC T3/T4/T6
- CL 1 Zone 0, AEx ia IIC T3/T4/T6 Ga

Japan Ex
Ex ia IIC T3/T4/T6 Ga

INMETRO
Ex ia IIC T3/T4/T6 Ga

Hazardous area versions of the digital sensors with Memosens technology are indicated by a red/orange ring on the plug-in head.

Pay attention to the instructions for Memosens data cable CYK10 and transmitters CM82 and CM42.

Additional certification

TÜV certificate for Memosens plug-in head

Pressure resistance 16 bar (232 psi) relative, minimum three times the safety pressure

EAC

The product has been certified according to guidelines TP TC 004/2011 and TP TC 020/2011 which apply in the European Economic Area (EEA). The EAC conformity mark is affixed to the product.

Ordering information

Product page

www.endress.com/cps16e

Product Configurator

On the product page there is a **Configure** button to the right of the product image.

1. Click this button.
   ↳ The Configurator opens in a separate window.
2. Select all the options to configure the device in line with your requirements.
   ↳ In this way, you receive a valid and complete order code for the device.
3. Export the order code as a PDF or Excel file. To do so, click the appropriate button on the right above the selection window.

For many products you also have the option of downloading CAD or 2D drawings of the selected product version. Click the **CAD** tab for this and select the desired file type using picklists.

Scope of delivery

The delivery comprises:
- Sensor in the version ordered
- Operating Instructions
- Safety instructions for the hazardous area (for sensors with Ex approval)

Accessories

The following are the most important accessories available at the time this documentation was issued.

▶ For accessories not listed here, please contact your Service or Sales Center.

Device-specific accessories

Assemblies

Unifit CPA842
- Installation assembly for food, biotechnology and pharmaceutics
- With EHEDG and 3A certificate
- Product Configurator on the product page: www.endress.com/cpa842

Technical Information TI01367C

Cleanfit CPA875
- Retractable process assembly for sterile and hygienic applications
- For in-line measurement with standard sensors with 12 mm diameter, e.g. for pH, ORP, oxygen
- Product Configurator on the product page: www.endress.com/cpa875

Technical Information TI01168C

Dipfit CPA140
- pH/ORP immersion assembly with flange connection for very demanding processes
- Product Configurator on the product page: www.endress.com/cpa140

Technical Information TI00178C

Cleanfit CPA871
- Flexible process retractable assembly for water, wastewater and the chemical industry
- For applications with standard sensors with 12 mm diameter
- Product Configurator on the product page: www.endress.com/cpa871

Technical Information TI01191C

Cleanfit CPA473
- Stainless steel process retractable assembly with ball valve shutoff for particularly reliable separation of the medium from the environment
- Product Configurator on the product page: www.endress.com/cpa473

Technical Information TI00344C

Cleanfit CPA474
- Plastic process retractable assembly with ball valve shutoff for particularly reliable separation of the medium from the environment
- Product Configurator on the product page: www.endress.com/cpa474

Technical Information TI00345C

Dipfit CPA111
- Immersion and installation assembly made of plastic for open and closed vessels
- Product Configurator on the product page: www.endress.com/cpa111

Technical Information TI00112C

Flowfit CPA240
- pH/ORP flow assembly for processes with stringent requirements
- Product Configurator on the product page: www.endress.com/cpa240

Technical Information TI00179C

Flowfit CPA250
- Flow assembly for pH/ORP measurement
- Product Configurator on the product page: www.endress.com/cpa250

Technical Information TI00041C

Ecofit CPA640
- Set comprising adapter for 120 mm pH/ORP sensors and sensor cable with TOP68 coupling
- Product Configurator on the product page: www.endress.com/cpa640

Technical Information TI00246C

Buffer solutions

High-quality buffer solutions from Endress+Hauser - CPY20
The secondary buffer solutions have been referenced to primary reference material of the PTB (German Federal Physico-technical Institute) or to standard reference material of NIST (National Institute of Standards and Technology) according to DIN 19266 by a laboratory accredited by the DAkkS (German accreditation body) according to DIN 17025.
Product Configurator on the product page: www.endress.com/cpy20

ORP buffer solution CPY3
- 220 mV, pH 7
- 468 mV, pH 0.1

Product Configurator on the product page: www.endress.com/cpy3

Measuring cable

Memosens data cable CYK10
- For digital sensors with Memosens technology
- Product Configurator on the product page: www.endress.com/cyk10

Technical Information TI00118C

Memosens laboratory cable CYK20
- For digital sensors with Memosens technology
- Product Configurator on the product page: www.endress.com/cyk20



www.addresses.endress.com

Endress+Hauser

People for Process Automation