Enclosure series technoBOX

Type: TBA 122

Material-No.: 220.122.000

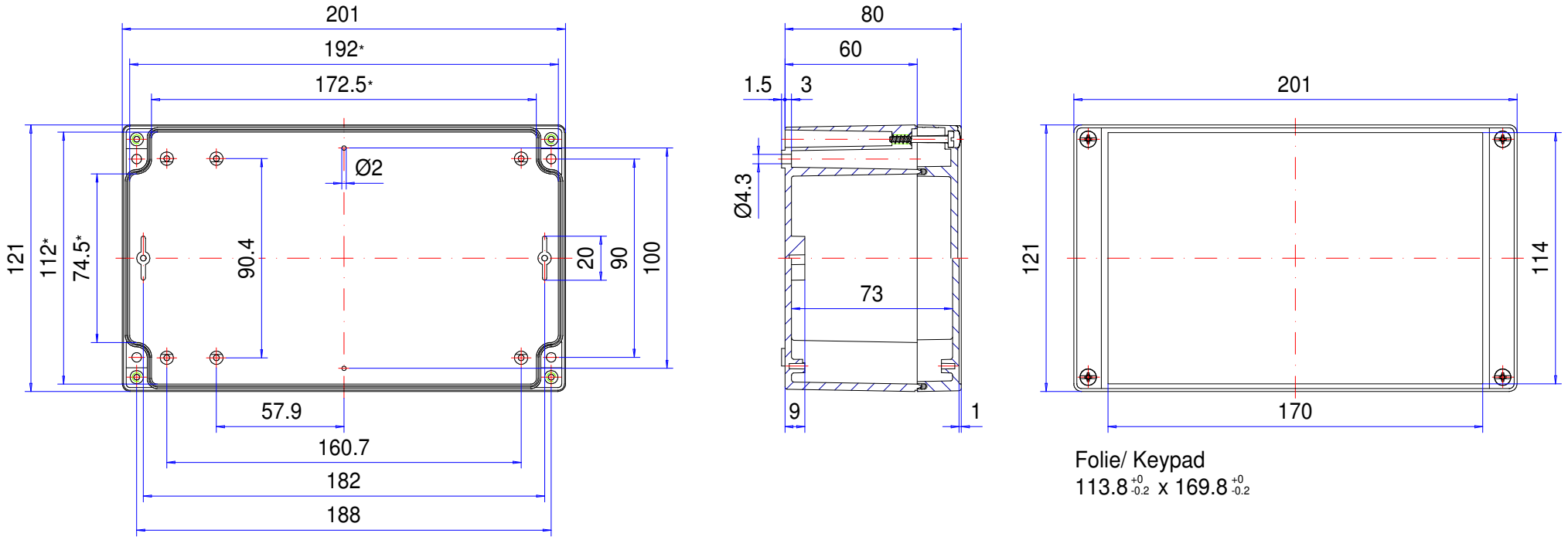

Folie/ Keypad
$113.8^{+0}_{-0.2}$ x $169.8^{+0}_{-0.2}$

* Please note: Mould slope for casting ejection, dimensions in the amount of the bottom!

Enclosure material	ABS, UL 94 HB, RAL 7035, light grey		Weight	400 g
Lid screws	4x stainless steel 1.4567 (V2A), captive		Assembly screws	4x KBL Ø3x6, galvanized steel
Gasket	1x Chloroprene (CR), light grey		Surface	Mirror finished
Ingress protection	IP66 EN 60529		Tolerance	DIN ISO 16901 T-130 (outside dimensions ±0,5mm)