Rittal – The System.

Faster – better – everywhere.



Enclosure cooling unit

3201.200

3201.300

Assembly and operating instructions

ENCLOSURES | POWER DISTRIBUTION | CLIMATE CONTROL | IT INFRASTRUCTURE | SOFTWARE & SERVICES

FRIEDHELM LOH GROUP

Hinweis:
Die Montage-, Installations- und Bedienungsanleitung ist auch als Download unter www.rittal.de verfügbar.

Note:
The assembly and operating instructions are available for downloading from www.rittal.com.

Remarque :
La notice de montage, d'installation et d'emploi peut être téléchargée depuis le site www.rittal.fr.

Opmerking:
De montage-, installatie- en gebruikshandleiding is ook te downloaden via www.rittal.nl.

Obs:
Montage-, installations- och bruksanvisningen kan även laddas ner på www.rittal.se.

Nota:
Le istruzioni di montaggio, installazione e uso possono anche essere scaricate dal sito www.rittal.it.

Nota:
Las instrucciones de montaje, instalación y puesta en marcha también están disponibles para su descarga en www.rittal.es.

Wskazówka:
Instrukcja montażu, instalacji i obsługi do pobrania na www.rittal.pl.

Upozornění:
Návody k montáži a obsluze jsou k dispozici ke stažení na www.rittal.cz.

Указание:
Руководство по монтажу, установке и эксплуатации можно найти на сайте www.rittal.ru.

提示:
装配和操作说明可从 www.rittal.cn 下载。

注記：
この取扱説明書 (組立・設置および運用マニュアル) は、www.rittal.co.jp からもダウンロードできます。

Hazards and their prevention according to IEC 60417/ISO 7000/ISO 7010



DE Die Anschlussvorschriften des zuständigen Stromversorgungsunternehmens sind zu beachten.
EN The connection regulations of the appropriate power supply company are to be followed.
FR Respecter les directives de raccordement du fournisseur d'électricité compétent.
NL Neem de aansluitvoorschriften van het desbetreffende energiebedrijf in acht.
SE Anslutningsföreskrifterna från det ansvariga elförsörjningsföretaget måste följas.
IT Osservare le prescrizioni relative al collegamento dell'azienda fornitrice di elettricità competente.
ES Deben tenerse en cuenta las normas del reglamento electrotécnico de baja tensión.
FI Huomioi energiayhtiön liitäntäohjeet.
DK Følg altid tilslutningsvejledningen fra det ansvarlige elselskab.
IE Ní mór rialacháin nasctha na cuideachta cuí a sholáthraíonn an chumhacht a leanúint.
PT Seguir as orientações da respectiva empresa de fornecimento de energia elétrica.
HR Potrebno je pridržavati se pravila o priključivanju odgovarajućeg napona isporučitelja električne energije.
MT Għandhom jiġu osservati r-rekwiżiti tat-tqabbid tal-kumpanija tal-provvista tal-elettriku lokali.
PL Przestrzegać przepisów odpowiedniego Zakładu Energetycznego.
CZ Dodržujte předpisy příslušného dodavatele elektrické energie pro připojení elektrického zařízení.
BG Трябва да се спазват предписанията за свързване към захранването на компетентното електроснабдително дружество.
GR Πρέπει να τηρούνται οι κανονισμοί σύνδεσης της σχετικής εταιρείας παροχής ηλεκτρικού ρεύματος.
RO Trebuie respectate cerințele de racordare ale companiei locale de alimentare cu energie.
HU Az illetékes áramszolgáltató csatlakoztatási előírásait figyelembe kell venni.
LT Privalu laikytis atsakingos elektros tiekimo tinklų bendrovės parengtų instrukcijų.
EE Järgige vastutava elektrivarustuse ettevõtte vooluvõrku ühendamise eeskirju.
LV Ievērojiet izmantotā elektropiegādes uzņēmuma pieslēguma noteikumus.
SI Upoštevati je treba predpise za priključevanje naprav pristojnega podjetja za distribucijo električne energije.
SK Treba dbať na predpisy príslušného dodávateľa elektrickej energie týkajúce sa zapojenia.
RU Необходимо соблюдать указания по подключению от компетентного энергопредприятия.



DE Verwenden Sie niemals brennbare Flüssigkeiten zur Reinigung des Geräts.
EN Never use flammable liquids for cleaning.
FR Ne jamais utiliser de liquides inflammables pour le nettoyage.
NL Gebruik geen brandbare vloeistoffen voor het reinigen.
SE Använd inga brännbara vätskor för rengöring.
IT Non utilizzare liquidi infiammabili per la pulizia.
ES No utilice líquidos inflamables para realizar la limpieza.
FI Älä käytä puhdistukseen palavia nesteitä.
DK Brug aldrig brændbare væsker til rengøring.
IE Ná húsáid leachtanna inlasta riamh i gcomhair glanta.
PT Nunca utilizar líquidos inflamáveis para efetuar a limpeza.
HR Nikada ne koristite zapaljive tekućine za čišćenje.
MT Tużax likwidi li jieħdu n-nar għat-tindif.
PL Do czyszczenia urządzenia nie stosować łatwopalnych cieczy.
CZ Nepoužívejte k čištění žádné hořlavé kapaliny.
BG Не използвайте запалими течности за почистване.
GR Μη χρησιμοποιείτε ποτέ εύφλεκτα υγρά για τον καθαρισμό.
RO Nu utilizați lichide inflamabile pentru curățare.
HU Tisztításhoz ne használjon gyúlékony folyadékot.
LT Valydami nenaudokite degių skysčių.
EE Ärge kasutage puhastamiseks põlevaid vedelikke.
LV Nekad neizmantojiet uzliesmojošus tīrīšanas līdzekļus.
SI Za čiščenje ne uporabljajte vnetljivih tekočin.
SK Na čistenie nepoužívajte horľavé kvapaliny.
RU Никогда не используйте горючие жидкости для чистки агрегата.

Hazards and their prevention according to IEC 60417/ISO 7000/ISO 7010

DE Das Kühlgerät ist ausschließlich zum Kühlen/Heizen von geschlossenen Schaltschränken vorgesehen. Eine andere Verwendung ist nicht bestimmungsgemäß. Das Gerät darf nicht an Orten installiert und betrieben werden, die der allgemeinen Öffentlichkeit (siehe DIN EN 60335-2-40, Absatz 3.119) zugänglich sind.
EN The cooling unit is intended only for cooling/heating closed enclosures. Any other use is not permitted. The unit must not be installed and operated in locations which are accessible to the general public (see DIN EN 60335-2-40, paragraph 3.119).
FR Le climatiseur est exclusivement destiné au refroidissement / chauffage d'armoires électriques fermées. Toute autre utilisation est non conforme. Le climatiseur ne doit pas être installé et exploité dans des lieux accessibles au public (voir norme EN 60335-2-40, paragraphe 3.119).
NL Het koelaggregaat is uitsluitend bestemd voor het koelen/verwarmen van gesloten kasten. Elke andere toepassing wordt gezien als niet-voorgeschreven gebruik. Het apparaat mag niet worden geïnstalleerd op plaatsen die openbaar (zie DIN EN 60335-2-40, paragraaf 3.119) toegankelijk zijn.
SE Aggregatet är uteslutande avsett för kylning/uppvärmning av slutna apparatskåp. Annan användning är inte tillåten. Aggregatet får inte installeras och köras på platser som är tillgängliga för allmänheten (se DIN EN 60335-2-40, stycke 3.119).
IT Il condizionatore è destinato esclusivamente al raffreddamento/riscaldamento degli armadi di comando chiusi. Ogni altro impiego è da intendersi non conforme alla sua destinazione d'uso. L'apparecchio non deve essere installato e utilizzato in aree accessibili al pubblico (vedere la norma DIN EN 60335-2-40, paragrafo 3.119).
ES El refrigerador se ha diseñado exclusivamente para la refrigeración/calefacción de armarios de distribución estancos. Cualquier otro uso no está permitido. El equipo no debe ser instalado ni puesto en funcionamiento en entornos accesibles al público en general (ver DIN EN 60335-2-40, párrafo 3.119).
FI Jäähdytin on tarkoitettu ainoastaan umpinaisten kytkentäkaappien jäähdyttämiseen/lämmittämiseen. Mikään muu käyttö ei ole sallittua. Laitetta ei saa asentaa ja käyttää yleisessä käytössä olevissa paikoissa (katso DIN EN 60335-2-40, kohta 3.119).
DK Køleapparatet er udelukkende beregnet til køling/opvarmning af lukkede kontaktskabe. Enhver anden brug er ikke tilladt. Enheden må ikke installeres eller opereres på lokaliteter med offentlig adgang (Se DIN EN 60335-2-40, paragraf 3.119)
IE Níl an t-aonad fuaraithe ceaptha ach amháin d'fhuarú na gcaibinéad rialaithe dúnta agus. Ní cheadaítear d'aon úsáid eile. Ná suiteáiltear agus ná oibrítear an t-aonad i suíomhanna arb inrochtana don phobal i gcoitinne iad (féach DIN EN 60335-2-40, mír 3.119).
PT A unidade de refrigeração destina-se exclusivamente à refrigerar gabinetes de controle fechados. Qualquer outro uso não é apropriado e não é permitido. O aparelho não deve ser instalado e operado em locais acessíveis ao público em geral (consulte a norma DIN EN 60335-2-40, seção 3.119).
HR Hladnjak je namijenjen isključivo za hlađenje/grijanje zatvorenih razvodnih ormara. Drugačija uporaba nije dozvoljena. Uređaj se ne smije instalirati i raditi na mjestima gdje je dostupan javnosti (DIN EN 60335-2-40, paragraph 3.119)
MT It-tagħmir refriġeranti għandu jintuża esklussivament biex ikessaħ l-armarji magħluqin. Użu ieħor ta' dan huwa ħażin. L-apparat ma għandux jiġi installat u ma għandux jitħaddem f'postijiet li huma aċċessibbli għallpubbliku (ara DIN EN 60335-2-40, Paragrafu 3.119).
PL O condicionador de ar está previsto somente para refrigeração/aquecimento de armários fechados. Każde inne zastosowanie jest niezgodne z przeznaczeniem. Urządzenie nie może być instalowane i użytkowane w miejscach ogólnodostępnych (patrz EN 60335-2-40, punkt 3.119).
CZ Chladicí jednotka je určena výhradně k chlazení/vytápění uzavřených rozváděčových skříní. Jiné použití není použití v souladu s určením. Zařízení se nesmí instalovat a provozovat na místech, která jsou veřejně přístupná (viz DIN EN 60335-2-40, oddíl 3.119).
BG Охладителят е предназначен за охлаждане/затопляне само на затворени разпределителни шкафове. Не се разрешава всякаква друга употреба. Уредът не трябва да се монтира и работи в местата, които са достъпни за широката общественост (виж DIN EN 60335-2-40, параграф 3.119).
GR Η ψυκτική συσκευή προορίζεται αποκλειστικά για την ψύξη/θέρμανση κλειστών ερμαρίων ζεύξης. Οποιαδήποτε άλλη χρήση δεν επιτρέπεται. Δεν επιτρέπεται η εγκατάσταση και η λειτουργία της συσκευής σε σημεία, τα οποία είναι προσβάσιμες στο ευρύ κοινό (δείτε DIN EN 60335-2-40, σημείο 3.119).
RO Dispozitivul de răcire este conceput exclusiv pentru răcirea/încălzirea dulapurilor de comandă închise. Orice alta utilizare nu este permisa. Unitatea nu trebuie instalata si folosita in locatii la care are acces publicul larg. (vezi DIN EN 60335-2-40, paragraf 3.119)
HU A hűtőberendezés kizárólag zárt kapcsolószekrények hűtésére/fűtésére szolgál. Minden más alkalmazás tilos. A berendezést tilos olyan helyre telepíteni és üzemeltetni, amely szabadon hozzáférhető laikusok számára (lásd DIN EN 60335-2-40, 3.119 bekezdés).
LT Aušintuvas skirtas tik uždaroms skirstomosioms spintoms aušinti/šildyti. Bet koks kitas naudojimas yra draudžiamas. Agregatas negali būti sumontuojamas ir eksplotuojamas viešai prieinamose vietose (pagal DIN EN 60335-2-40, punktas 3.119)
EE Jahutusseade on ette nähtud ainult suletud lülitikilpide jahutamiseks/kütmiseks. Muu laadne kasutus ei ole lubatud. Seadmete kasutus üldkasutatavates ruumides ei ole lubatud (vaata DIN EN 60335-2.40, § 3.119).
LV Dzesēšanas iekārta ir paredzēta tikai slēgtu vadības skapju dzesēšanai/sildīšanai. Jebkura cita izmantošana nav atļauta. Iekārtu nedrīkst uzstādīt un izmantot publiski pieejamās vietās (skatīt standarta DIN EN60335-2-40, paragrāfu 3.119).
SI Hladilna naprava je predvidena izključno za hlajenje/ogrevanje zaprtih stikalnih omar. Vsaka druga uporaba ni dovoljena. Naprava ne sme biti nameščena in delovati na lokaciji ki je dostopna širši javnosti (glej DIN EN 60335-2-40, odstavek 3.119).
SK Chladiaca jednotka je určená výlučne na chladenie/vyhrievanie uzatvorených skriňových rozvádzačov. Iné použitie nie je prípustné. Zariadenie nesmie byť inštalované a používané vo verejne dostupných priestoroch (viď DIN EN 60335-2-40, odstavec 3.119).
RU Агрегат предназначен исключительно для охлаждения/обогрева закрытых распределительных шкафов. Использование в других целях не соответствует его прямому назначению. Агрегат нельзя устанавливать и эксплуатировать в местах, доступных для посторонних лиц (см. DIN EN 60335-2-40, абзац 3.119)

Preface

Dear Customer!

Thank you for choosing an enclosure cooling unit "Thermoelectric Cooler" (hereafter also referred to as "cooling unit" or "RTC") from Rittal.

Yours
Rittal GmbH & Co. KG

Rittal GmbH & Co. KG
Auf dem Stützelberg

35745 Herborn
Germany

Phone: +49(0)2772 505-0
Fax: +49(0)2772 505-2319

E-mail: info@rittal.com
www.rittal.com
www.rittal.de

We are always happy to answer any technical questions regarding our entire range of products.

EN

Contents

1 Notes on documentation 7
1.1 CE labelling 7
1.2 Storing the documents 7
1.3 Symbols used in these operating instructions 7
1.4 Other applicable documents 7

2 Safety notes 7

3 Device description 8
3.1 Functional description 8
3.1.1 Function 8
3.1.2 Control 9
3.1.3 Bus mode 9
3.1.4 Safety devices 9
3.1.5 Condensation 9
3.1.6 Filter mats 9
3.2 Intended use, foreseeable misuse 9
3.3 Scope of supply 10

4 Assembly and connection 10
4.1 Choosing the installation site 10
4.1.1 Layout of the electronic components in the enclosure 10
4.2 Fitting the cooling units 10
4.2.1 Making the cut-outs 10
4.2.2 External mounting of the cooling units 11
4.2.3 Full internal mounting of the cooling unit 11
4.2.4 Mounting positions 11
4.3 Connecting the condensate water discharge 11
4.4 Notes on electrical installation 12
4.4.1 Connection data 12
4.4.2 Potential equalisation 12
4.5 Performing the electrical installation 12
4.5.1 Bus connection (only when interconnecting several units) 12
4.5.2 Interface X2 – unit programming 13
4.5.3 Connecting the power supply 13
4.6 Installing the filter media 13

5 Commissioning 14

6 Operation 15
6.1 Connection 15
6.2 Software installation 15
6.2.1 Driver installation 15
6.2.2 Driver installation with Windows 8.x and Windows 10 16
6.3 General information about programming 16
6.4 Editable parameters 16
6.5 Evaluating system messages 17
6.6 Setting the master-slave identifier 19
6.7 Temperature logging 19
6.8 Accept configuration 20

7 Inspection and maintenance 20

8 Disposal 20

9 Accessories 20

10 Technical details 21
10.1 Technical specifications 21
10.2 Performance diagrams 22

11 Appendix 22
11.1 Cut-out and hole sizes 22
11.1.1 Dimensions for external mounting 22
11.1.2 Dimensions for full internal mounting 22
11.2 Declaration of conformity 23

EN

1 Notes on documentation

1.1 CE labelling

Rittal GmbH & Co. KG confirms the conformity of the cooling unit with the European Union's Machinery Directive 2006/42/EC and EMC Directive 2014/30/EC.
A corresponding declaration of conformity has been issued. This can be found at the end of this document, or on the Rittal homepage.

CE

1.2 Storing the documents

The assembly and operating instructions as well as all other applicable documents are an integral part of the product. They must be issued to everyone who works with the unit and must always be available and on hand for operating and maintenance personnel.

1.3 Symbols used in these operating instructions

The following symbols are used in this documentation:



Danger!
Hazardous situation which will result in death or serious injury if the instructions are not followed.



Warning!
Hazardous situation which may lead to death or serious injury if the instructions are not followed.



Caution!
Hazardous situation which may lead to (minor) injuries if the instructions are not followed.



Note:
Important notices and indication of situations which may result in material damage.

■ This symbol indicates an "action point" and shows that you should perform an operation or procedure.

1.4 Other applicable documents

Assembly and operating instructions in paper and digital format are available for the unit types described here.
We cannot accept any liability for damage associated with failure to observe these instructions. Where applicable, the instructions for any accessories used also apply.

2 Safety notes

Please observe the following general safety instructions for the installation and operation of the system:

– Assembly, installation and servicing may only be performed by properly trained specialists.
– Do not obstruct the air inlet and air outlet of the cooling unit inside and outside the enclosure.
– The heat loss of the components installed in the enclosure must not exceed the useful cooling power of the cooling unit.
– Use only original spare parts and accessories.
– Do not make any changes to the cooling unit other than those described in these instructions or associated instructions.
– The mains connector of the cooling unit must only be connected and disconnected with the system de-energised. Connect the pre-fuse specified on the rating plate.

EN

3 Device description

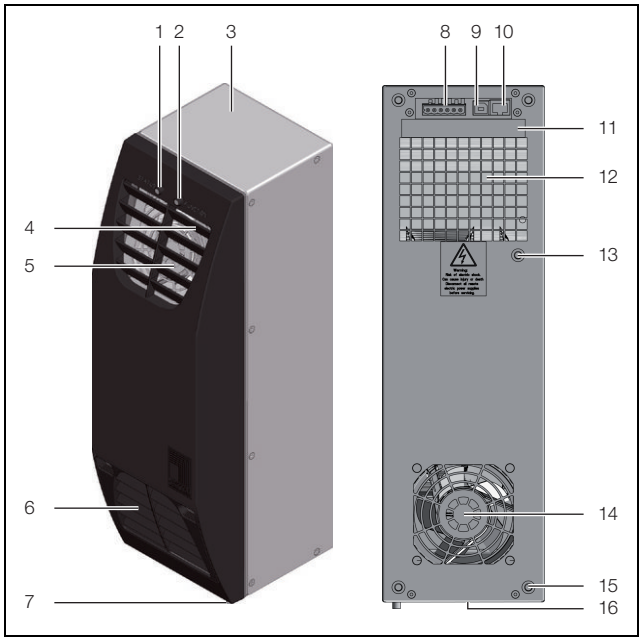

Fig. 1: Device description

Key

1 Status display
2 Function display
3 Housing
4 Louvred grille
5 Air outlet opening – external air circuit
6 Air inlet opening with filter element (optional) – external air circuit
7 Condensate discharge
8 Interface X1: supply voltage and alarm output
9 Interface X2: USB 2.0, type B
10 Interface X3: RJ 45
11 Connection diagram
12 Air inlet opening – internal air circuit
13 Potential equalisation
14 Air outlet opening – internal air circuit
15 Blind nut
16 Rating plate (on the device lower side)

3.1 Functional description

3.1.1 Function

The Rittal Thermoelectric Cooler uses the Peltier effect for cooling/heating. This effect is based on the principle that an electric direct-current flowing through a circuit consisting of two different metals causes the cooling of one contact point and the heating of the other contact point. An appropriate layout for the cooling/heating production is designated as Peltier element.

When the Peltier effect is used for enclosure climate control, an air flow is fed over the upper and lower connection point. The heat energy is released or accepted from the air flow to the Peltier element.

The air flow that releases the heat energy to the element is introduced as cooling air flow in the enclosure or the operating housing.

After the heating of the cooling air flow by the active installed equipment, it is returned to the climate control unit and fed for renewed cooling over the "cold" side of the Peltier element. This produces an air circulation that causes the cooling of the enclosure or the operating housing.

The air flow that accepts the heat energy from the "warm" side of the Peltier element is released as warm air flow to the external air circuit of the climate control unit. This means the heat produced by the components in the enclosure is dissipated to the ambient air surrounding the climate control unit.

By reversing the polarity with the controller, depending on the unit's setpoints, operation is switched to heating. This will reverse the process described above.

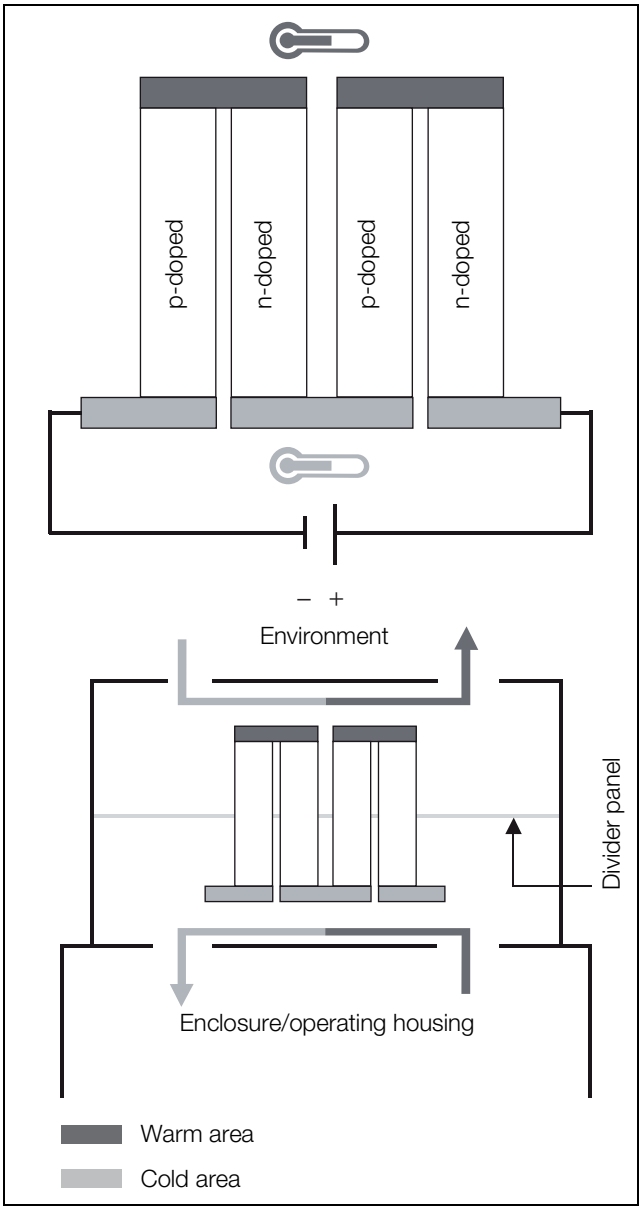

Fig. 2: Peltier element, Peltier climate control unit (cooling operation)

3.1.2 Control

The Rittal Thermoelectric Cooler controls the cooling/heating capacity of the Peltier elements and the air throughput of the integrated fans so that the required internal temperature of the enclosure or the operating housing is set with high accuracy. For this purpose, the device permanently monitors the air entry temperature at the warm air entry (internal circulation). If this temperature exceeds or falls below a parameterised temperature value (factory setting: cooling 35 °C/heating 5 °C), the device starts cooling/heating operation. To do this, the trigger voltages of the Peltier elements and fans are corrected by a PID control so that the cooling/heating capacity required for the cooling/heating is always available and the cooling/heating operation is provided with the least possible power. The redundant fans in the external air circuit of the Rittal Thermoelectric Cooler have variable air delivery rates (and consequently variable speeds) appropriate for the required cooling/heating capacity. If only limited or indeed no cooling/heating capacity is required, this control behaviour can lead to a temporary inactivity of the fans in the external air circuit. This does not constitute a malfunction of the device, but rather an extreme power-saving operating state that also increases the service life of the used fans.



Note:
The fan speed in the external air circuit of the climate control unit is matched to the current cooling/heating capacity requirement. Consequently, a stoppage of the fans – interrupted by periodic, short-term fan starts – is not a malfunction of the device, but rather represents an extreme powersaving operating state!

PC software is available for the Rittal Thermoelectric Cooler and can be used to set the functions of the cooling unit (see section 6 "Operation").

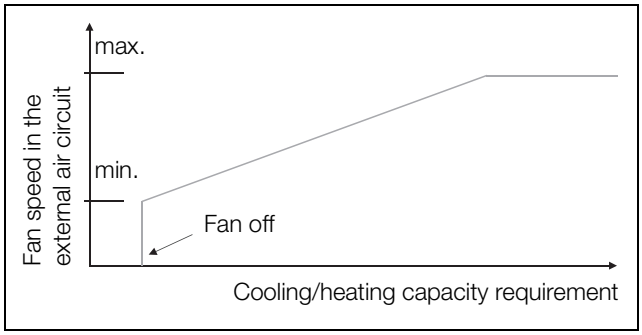

Fig. 3: Control behaviour of the fans in the external air circuit

3.1.3 Bus mode

The serial unit interface X3 allows you to create a bus connection with up to 5 Rittal Thermoelectric Coolers (1 master, up to 4 slaves) using the master-slave cable and the master-slave adaptor (parallel mode for higher cooling output, redundancy).

Before commissioning, you will need to define "master" or "slave" status for each unit once only in the "Configuration" field (see chapter 6 "Operation").

3.1.4 Safety devices

– The device has floating contacts on the connection pins (terminals 1 – 3), via which system messages from the device may be polled, e.g. using a PLC (1 x change-over contact).

3.1.5 Condensation

At high levels of humidity and low temperatures inside the enclosure, condensation may form on the Peltier element. The condensation is routed downwards out of the unit via a drain pipe. For this purpose, a hose must be connected to the condensate nozzle (see section 4.3 "Connecting the condensate water discharge"). External condensate evaporators are available as accessories for the Rittal Thermoelectric Cooler (refer also to the accessories in the Rittal Catalogue).

3.1.6 Filter mats

For dry, coarse dust and lint in the ambient air, we recommend installing a filter mat in the cooling unit. Depending on the incidence of dust, you will need to replace the filter mat from time to time.

3.2 Intended use, foreseeable misuse

Rittal enclosure cooling units were developed and designed in accordance with the state of the art and the recognised rules governing technical safety. Nevertheless, if used improperly, they may pose a threat to life and limb or cause damage to property. The unit is only intended for cooling/heating enclosures. Any other use is deemed improper.

The manufacturer will not be liable for any damages caused as a result of improper use, or for incorrect assembly, installation or use. All risk is borne solely by the user.

Proper usage also includes the observation of all valid documents and compliance with the inspection and servicing conditions.

EN

3.3 Scope of supply

The unit is supplied in a packaging unit in a fully assembled state. Please check the scope of supply for completeness.

Qty.	Description
1	Rittal Thermoelectric Cooler
1	Dispatch bag with
1	– Assembly and operating instructions
1	– Self-adhesive tape
1	– Connector X1
5	– Cheese-head screws
5	– Washers
1	– Serrated contact washer
1	– Filter mat
1	– USB cable (1.8 m)
1	Drilling template

Tab. 1: Scope of supply

4 Assembly and connection

4.1 Choosing the installation site

When choosing the installation site for the enclosure, please observe the following:

– The site for the enclosure, and hence the arrangement of the cooling unit, must be carefully selected so as to ensure good ventilation (distances between units and distances between the unit and the wall must be at least 100 mm in each case).
– The site must be free from excessive dirt and moisture.
– The ambient temperature must not be higher than 55 °C (3201.200) or 60 °C (3201.300).
– It must be possible to fit a condensate discharge (see section 4.3 "Connecting the condensate water discharge").
– The mains connection data as stated on the rating plate of the unit must be guaranteed.
– The mounting position of the climate control unit must be chosen so that the air flow supports the cooling/heating of these components.
– The climate control unit must be positioned on the enclosure so that the condensate discharge opening is located at the lowest point of the climate control unit.

4.1.1 Layout of the electronic components in the enclosure

Caution!
Risk of condensation!
When arranging the components inside the enclosure, please ensure that the cold airflow from the cooling unit is not directed at active components. Please also ensure that the cold airflow is not directed at the warm exhaust airflow from active components such as converters. This may lead to an air short-circuit and therefore prevent adequate climate control, or may even cause the cooling unit's internal safety devices to cease cooling operation.

■ It is important to ensure even air circulation inside the enclosure.
– Under no circumstances should air inlet and outlet openings be obstructed, otherwise the cooling performance of the unit will be reduced.
■ Ensure a suitable distance from electronic components and other installed enclosures so that the required air circulation is not obstructed and prevented.

4.2 Fitting the cooling units

The enclosure cooling unit may optionally be externally mounted on the enclosure, or fully internally mounted:

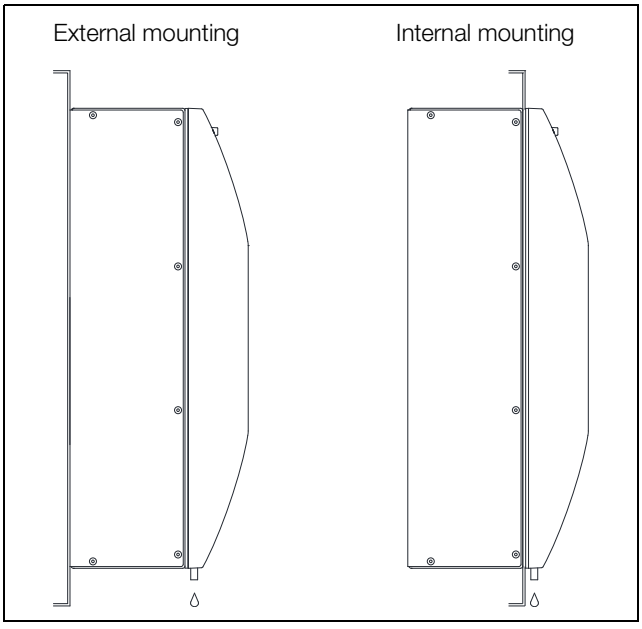

Fig. 4: External and internal mounting

To this end, cut the side panel or door of the enclosure as per the drilling template included with the supply, and drill the relevant holes.

4.2.1 Making the cut-outs

■ Affix the supplied drilling template to the side panel or door of the enclosure using adhesive tape.

There are dimensioning lines on the drilling template to suit the various installation options for your cooling unit.

- Using the dimension drawings (see section 11 "Appendix", identify the valid lines and dimensions for your installation type on the drilling template.

Caution!
Risk of injury!
Carefully deburr all drilled holes and cut-outs to prevent injuries caused by sharp edges.

- Mark, drill and deburr the holes.
- Make the cut-outs including the line width as per the drilling template.
- Deburr the cut-outs.

4.2.2 External mounting of the cooling units

- Cut the supplied sealing tape to the correct length and stick it carefully along the back of the unit so that no gaps are left at the joints.

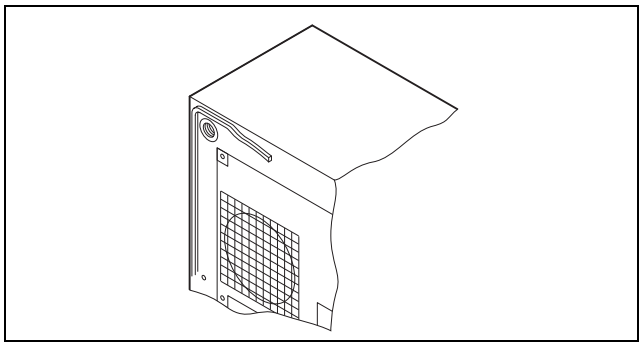

Fig. 5: Applying the self-adhesive tape

- Secure the unit using the supplied cheese-head screws and nuts.

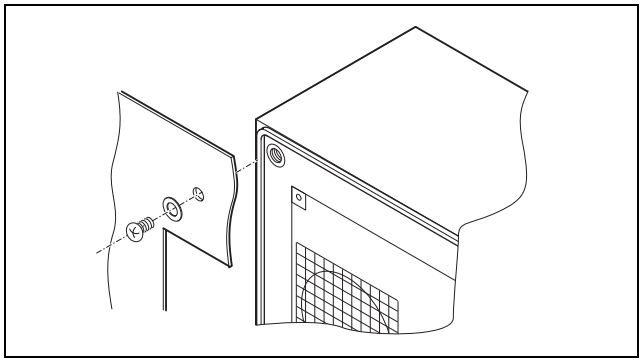

Fig. 6: Securing the cooling unit

4.2.3 Full internal mounting of the cooling unit

- Carefully remove the louvred grille from the enclosure by pulling forwards.
- Cut the supplied sealing tape to the correct length and stick it carefully along the enclosure front so that no gaps are left at the connection points.
- Loosen the four nuts and washers from the front enclosure half.
- Push the unit into the mounting cut-out from the inside of the enclosure, and secure it to the enclosure from the outside using the cheese-head screws and nuts.

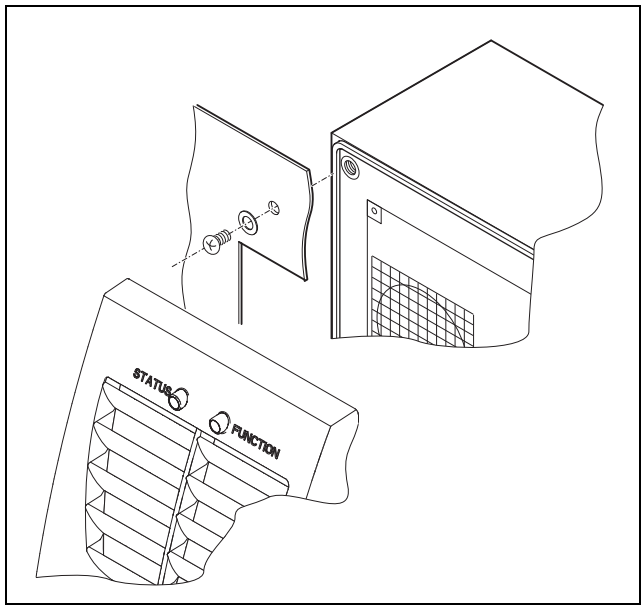

Fig. 7: Securing the cooling unit

4.2.4 Mounting positions

The Rittal Thermoelectric Cooler may optionally be mounted vertically or horizontally. Please observe the max. permissible tilt angles (fig. 8).

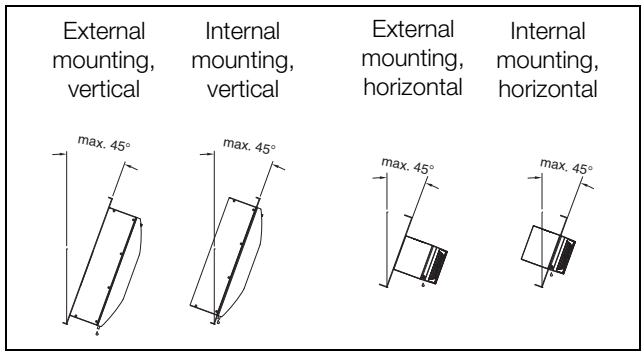

Fig. 8: Permissible mounting positions

4.3 Connecting the condensate water discharge

A condensate discharge hose may be fitted to the Thermoelectric Cooler.

The condensate discharge

– must be laid with a suitable and constant gradient (no siphoning)
– must be laid without kinks
– must not have a reduced cross-section if extended

EN

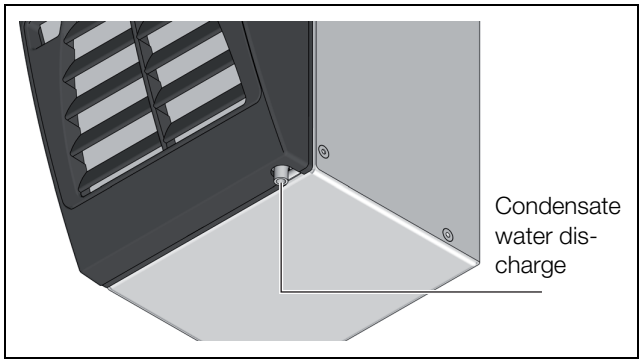

Fig. 9: Condensate water discharge

- Connect a suitable hose to the condensate nozzle and secure using a hose clip.
- Lay the condensate hose into a pay-off or into the external condensate evaporator (refer to Accessories in the Rittal Catalogue).

4.4 Notes on electrical installation

- When performing the electrical installation, it is important to observe all valid national and regional regulations as well as the provisions of the responsible electrical supply company.
- Electrical installation must only be carried out by a qualified electrician who is responsible for compliance with the existing standards and regulations.

Note:
When measuring insulation resistance, the Rittal Thermoelectric Cooler must be de-energised or the test voltage must not exceed a maximum of 500 V DC.

4.4.1 Connection data

– The connected voltage and frequency must correspond to the values stated on the rating plate.
– The cooling unit must be connected to the mains via an all-pin isolating device, which ensures at least 3 mm contact opening when switched off.
– No additional temperature control may be connected upstream of the unit at the supply end.
– Install the pre-fuse specified on the rating plate to protect the cable and equipment from short-circuits.
– The mains connection must ensure low-noise potential equalisation.

4.4.2 Potential equalisation

If, for EMC reasons, the unit is to be integrated into the customer's existing potential equalisation system, a conductor with a nominal cross-section of at least 6 mm^2 can be connected to the potential equalisation connection point (attachment points) on the Rittal Thermoelectric Cooler.
According to the standard, the PE conductor in the mains connection cable is not classified as an equipotential bonding conductor.

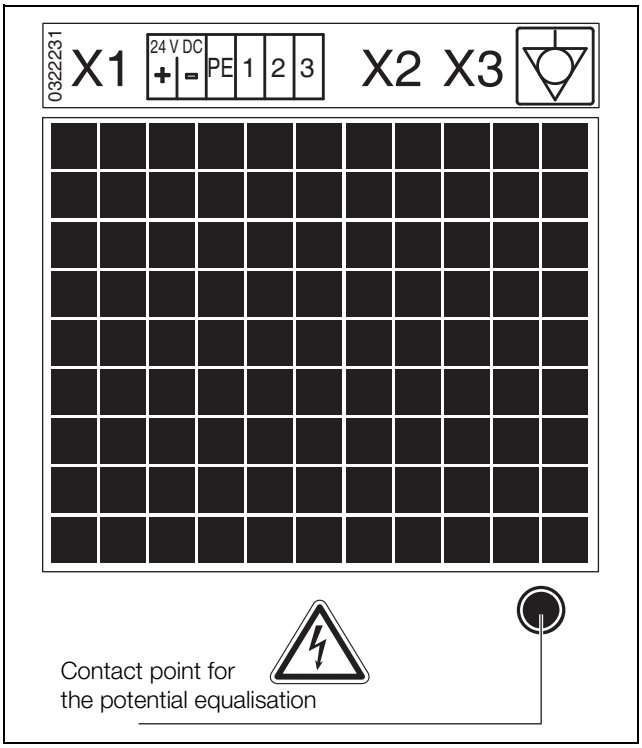

Fig. 10: Connection point for potential equalisation

4.5 Performing the electrical installation

4.5.1 Bus connection (only when interconnecting several units)

The X3 serial interface allows you to connect up to 5 Rittal Thermoelectric Coolers using the master-slave cable and the master-slave adaptor.

Note:
The electrical signals at the interface X3 are extra-low voltages (not safety extra-low voltages in accordance with EN 60335).

When interconnecting, please note the following:

- De-energise the cooling units to be connected.
- Ensure proper electrical insulation.
- Make sure the cables are not laid in parallel to power lines.
- Make sure that the lines are short.

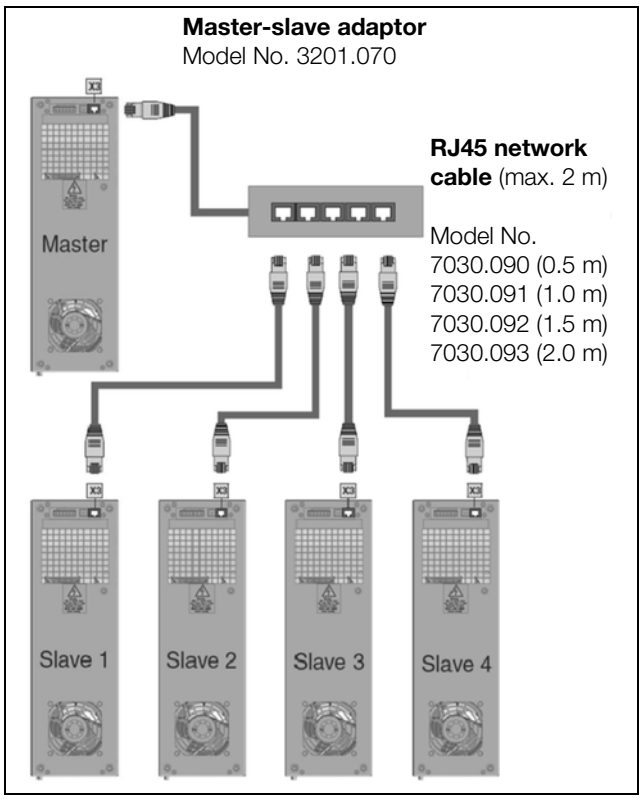

Fig. 11: Connection example: Master-slave operating mode

Caution!
The network cable on the adaptor should be connected directly to the master unit.

4.5.2 Interface X2 – unit programming

– USB 2.0 interface for RTC-PC software
– The software can be found on the Rittal website.

4.5.3 Connecting the power supply

- Complete the electrical installation by following the wiring plans shown.
- Should you wish to evaluate the system messages from the cooling via the system message relay, you should additionally connect a suitable alarm signalling cable to terminals 1 – 3.

Note:
The length of the alarm signalling cable must not exceed 3 m.

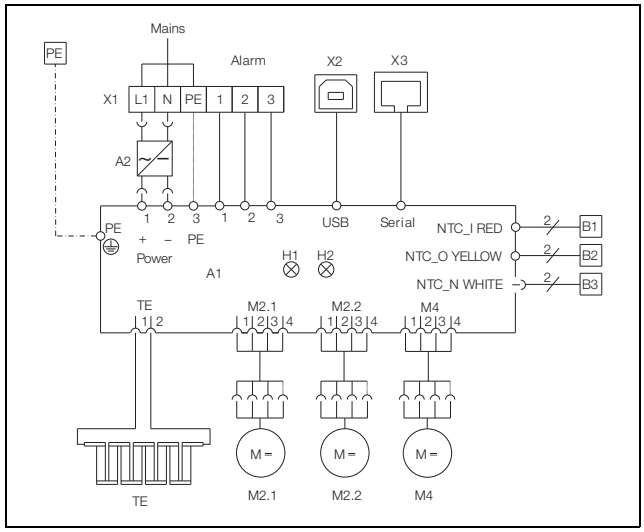

Fig. 12: Electrical wiring plan no. 1, with integral power pack

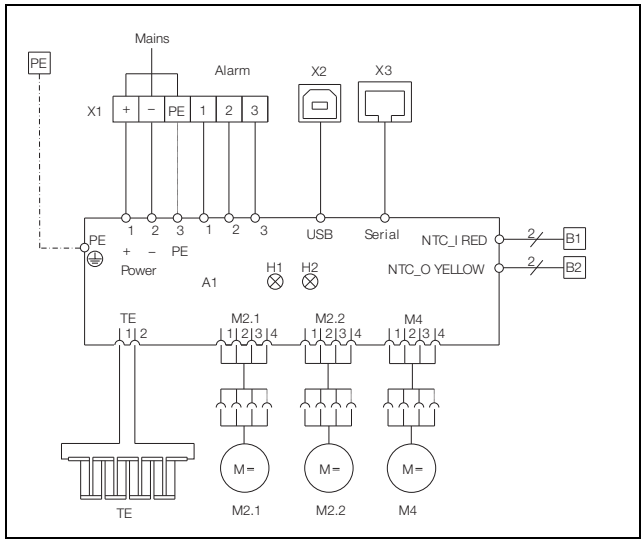

Fig. 13: Electrical wiring plan no. 2, without integral power pack

Key

A1	Power PCB
A2	Power pack
B1	Temperature sensor, internal temperature
B2	Ambient temperature sensor
B3	Temperature sensor, power pack
H1/H2	Status and function display
M2.1	External fan 1
M2.2	External fan 2
M4	Internal fan
TE	Thermoelectric elements
X1	Terminal strip
X2	USB connection
X3	Interface (master-slave)

4.6 Installing the filter media

The Rittal Thermoelectric Cooler can be equipped with a device filter (supplied).
An appropriate filter unit is recommended when the climate control unit is used in ambient air subject to dust.

EN

Note:
When a filter unit is used, it must be cleaned regularly or, if necessary, replaced.

- Gently lift the louvred grille at the marked position and pull it off forwards.
- Insert the filter mat into the filter holder (with the colour-coded side of the filter mat facing the device).
- Press the louvred grille back onto the housing.

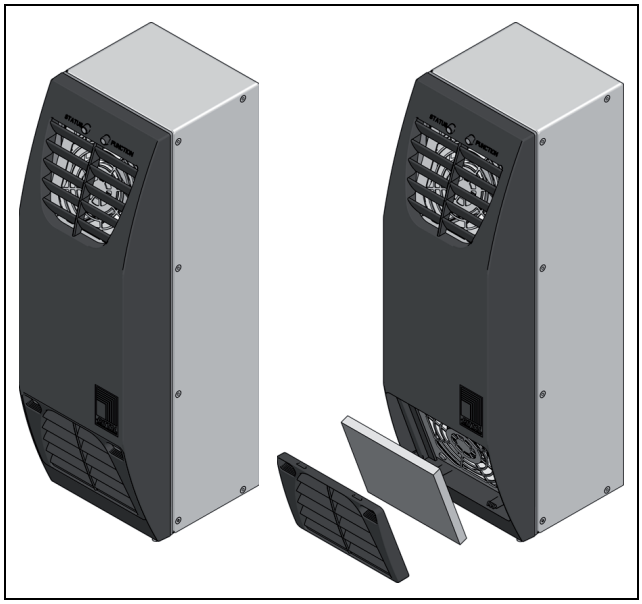

Fig. 14: Installing the filter mat

5 Commissioning

- Once all the assembly and installation work is complete, switch on the power supply to the cooling unit.

The cooling unit starts running. The operating state is indicated by the status and function LEDs:

Function LED	Description
Off	Unit in standby mode
Green	Cooling operation ON
Orange	Heating operation ON
Red	Device error message (see section 6 "Operation")

Tab. 2: Function displays

Status LED	Description
Off	Unit off
Green	Unit OK
Orange	Device warning message (see section 6 "Operation")

Tab. 3: Status displays

Status LED	Description
Red	Device error message (see section 6 "Operation")

Tab. 3: Status displays

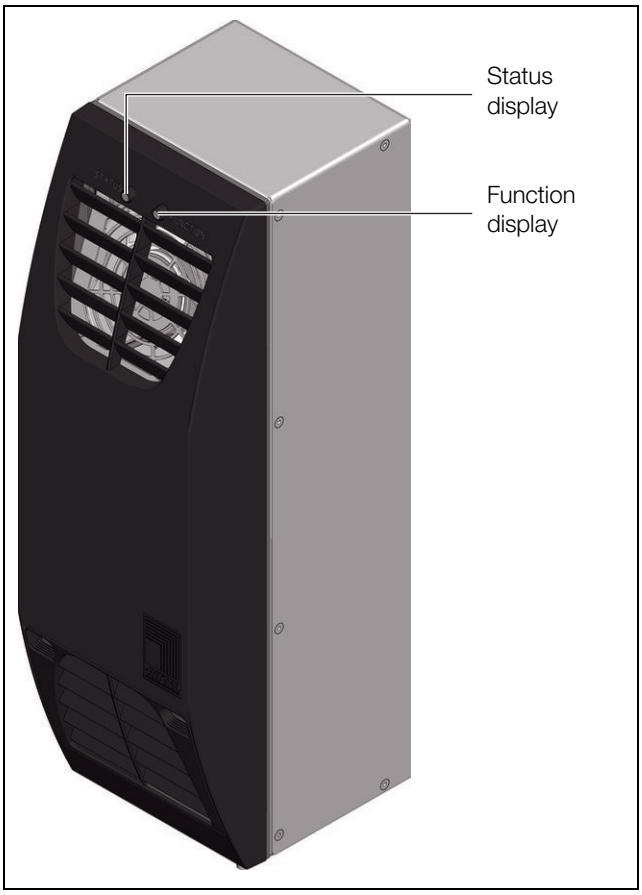

Fig. 15: Status and function displays on the climate control unit

The programming software, available for downloading from the Rittal website, allows you to make individual settings on the device, such as the setpoint temperature.
If the factory setting is unchanged, the temperature control of the enclosure or operating housing uses the following parameters:

Parameters	Value
Enclosure internal temperature setting	+35 °C
Start temperature for cooling operation	+35 °C
Over-temperature alarm message	+45 °C
Start temperature for heating operation	+5 °C
Alarm temperature / under-temperature	-5 °C

Tab. 4: Factory settings

EN

6 Operation

The PC software for your Rittal Thermoelectric Cooler (3201.200 or SK 3201.300), with its user-friendly operator interface, offers the following functions:

– Parameter adjustment of the unit
– Polling the current operating status
– Temperature logging
– Viewing the failure statistics

Note:
This software constitutes an interface which is not intended for permanent operation. Before powering down your PC, it is essential to disconnect the USB correctly.

The RTC PC software runs under the following operating systems: Windows 2000, Xp, 7, 8 and 10.

6.1 Connection

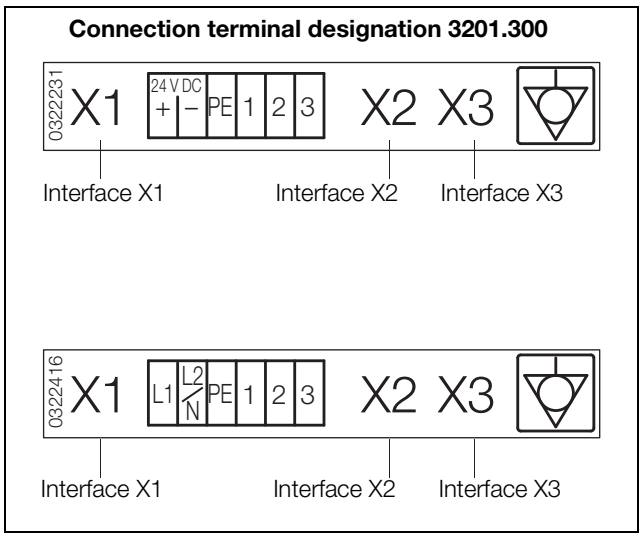

Fig. 16: Designations of the device interfaces

- Connect interface **X2** of the Thermoelectric Cooler to your PC using the USB cable supplied.

Note:
The unit need not be connected to the power supply (interface X1).
The Thermoelectric Cooler confirms connection by flashing the status and function display simultaneously in red. If the unit is additionally connected to the power supply, the function display will indicate the relevant operating status.

6.2 Software installation

- Download the installation files from the Rittal website.
- Unzip the file "Rittal_3201200_Treiber_3_2574.zip".
- Launch the file "setup_RTC_Vx.xx.exe" and follow the steps to install the RTC PC software.

6.2.1 Driver installation

Before using the software, you will need to manually install the USB driver using the Windows Device Manager.

- Open the Device Manager (System Control > System > Device Manager).
- Double-click on: "TE-COOLER VSP".



Fig. 17: Select device

- Click on the "Driver" tab.
- Click on "Update driver".

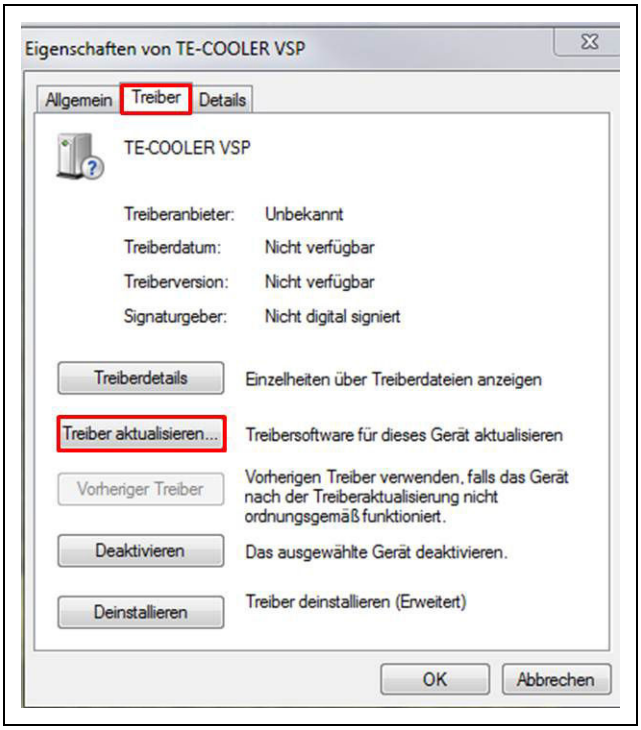

Fig. 18: Update driver

- Select the option "Browse my computer for driver software".
- Navigate to the folder "RTC/RtcDrvPack_1220" which you unzipped in section 6.2.
- Click on "OK" then "Next".
- A security warning will appear. Click on "Install this driver software anyway".

EN

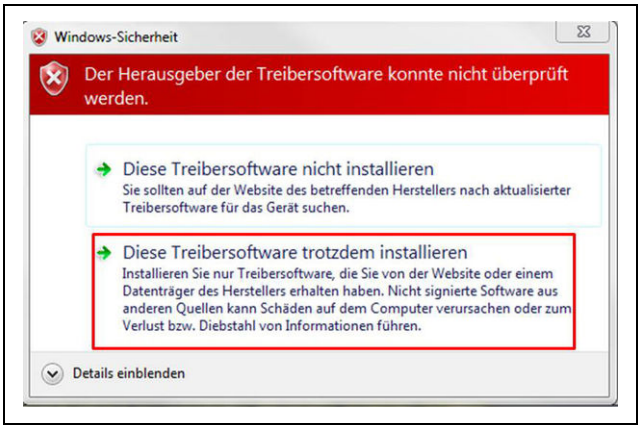

Fig. 19: Security warning

- Once the driver has been successfully installed, the software can be used.

6.2.2 Driver installation with Windows 8.x and Windows 10

Manual driver installation with Windows 8 and Windows 10 will lead to an error message:

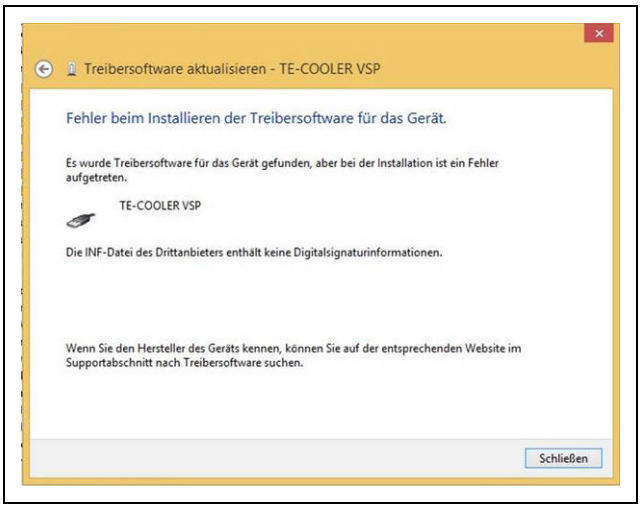

Fig. 20: Error message

To install the driver, you will first need to enable the installation of unsigned drivers.

- Click on the Windows symbol in the bottom left and select "Settings" from the start menu.
  Go to the "Recovery" option under "Update & Security".
- Under "Advanced Startup" click on the "Restart now" button.
- If the blue UEFI screen opens, select Troubleshoot.
  The "Startup Settings" can be found under "Advanced Options".
  Click on the "Restart" button, and all available startup settings will be displayed within a few seconds.
- Select the option "Disable driver signature enforcement" by clicking on the [F7] key.
  The system will reboot. The driver can now be installed as described in section 6.2.1.

Note:
The setting "Disable driver signature enforcement" will remain active until the next restart.

6.3 General information about programming

When the software is launched, a login window will open.

- Click on "Connect".
- When asked for a password, enter "admin", then click on "OK".

You are now able to use all the functions of the PC software.

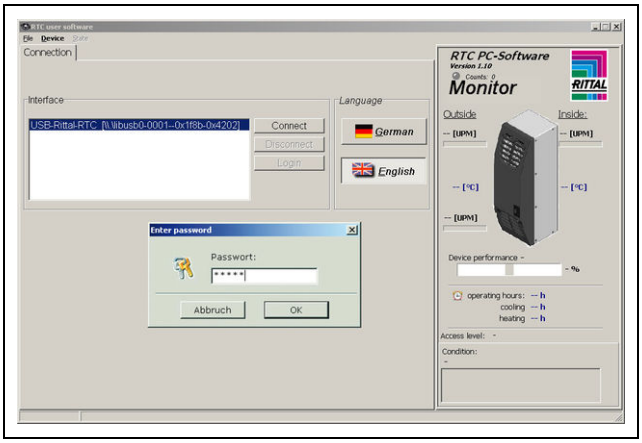

Fig. 21: Login window

Note on passwords:
The default password is "admin" and cannot be altered.

Note on temperature settings:
The temperature is preset at the factory to +35 °C. In order to save energy, and due to the risk of increased condensation, you should not set the temperature any lower than actually necessary.

Note on useful cooling output:
Interactive performance diagrams for calculating the useful cooling output may be found at www.rittal.com.

6.4 Editable parameters

Under the "Configuration" tab, changes can be made to the operating parameters of the RTC.

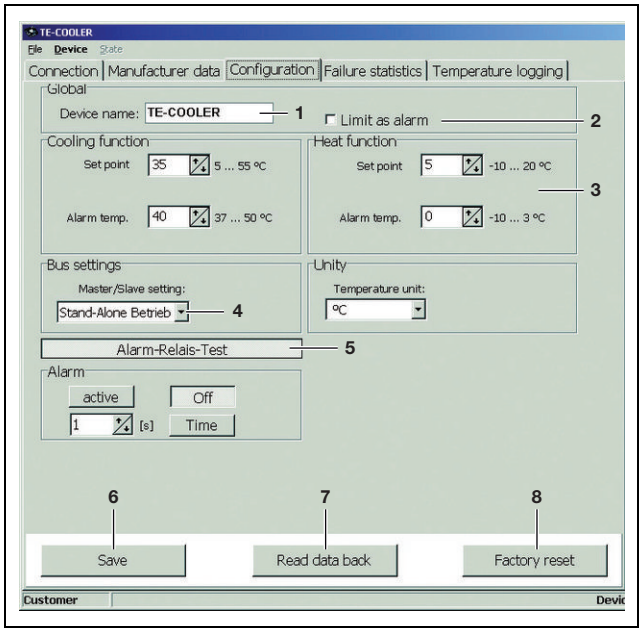

Fig. 22: RTC configuration

Key

1 Individual assignment of a device name
2 Configuration of alarm relay
3 Parameter range: see tab. 5 "Setting range"
4 Master-slave setting
5 The alarm relay of the RTC can be activated and reset manually using the alarm relay test button. Additionally, it is possible to set a period of time after which the relay is automatically reset.
6 Transfer the previously made settings to the RTC
7 Read the parameter currently stored in the RTC
8 Reset all parameters to factory setting (see tab. 5 "Setting range")

Variable	Range	Factory setting
Cooling function: Setpoint	+5…+55 °C	+35 °C
Cooling function: Alarm temperature (hysteresis)	2…15 K above setpoint	5 K
Heating function: Setpoint	-10…+20 °C	+5 °C
Heating function: Alarm temperature (hysteresis)	2…15 K below setpoint	5 K
Changeover °C/°F	°C/°F	°C
Master-slave operating mode	1 master, up to 4 slaves	Stand-alone operating mode

Tab. 5: Setting range

Note:
The setpoints of the cooling and heating function are locked in relation to one another, i.e. the minimum difference is 1 K, to facilitate precise temperature control inside the enclosure.

6.5 Evaluating system messages

The system messages are displayed on the device (status and function LED) and in the PC software (under the tab "Failure statistics").

Note:
Errors are recorded even if the device is not connected to a PC.

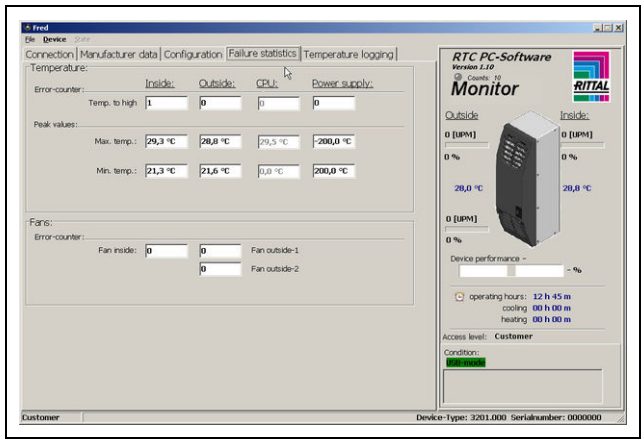

Fig. 23: System messages

EN

System message	Description	LEDs		Alarm relay	Action
		Status	Function		
Sensor failure/short-circuit: – External sensor Power pack sensor Control sensor	Temperature sensor defective or short-circuit. Device performance limited to max. 80 %*.	orange (flashing)	off = stand-by green = cooling orange = heating	freely configurable**	Replace the device.
Sensor failure/short-circuit: – Interior sensor	Temperature sensor defective/short-circuit. Device offline. External fan 40%, internal fan 100% in operation.	red (illuminated)	–	switched	
Overtemperature: Interior temperature > Cooling setpoint	Device is cooling (normal operation).	green (illuminated)	green (illuminated)	not switched	–
Overtemperature: – Exterior > 55 °C Power pack > +75 °C Control > +85 °C	Device performance limited to max. 80 %*.	orange (flashing)	off = stand-by green = cooling orange = heating	freely configurable**	Check cooling output, replace filter mat if necessary, excessive heat loss inside enclosure.
Overtemperature: Interior temperature > Cooling alarm temperature	Device is cooling.	green (illuminated)	green (illuminated)	switched	
Undertemperature: Interior temperature < Heating setpoint	Device is heating (normal operation).	green (illuminated)	orange (illuminated)	not switched	–
Undertemperature: – Exterior temperature < -30 °C – Power pack and control temperature < -40 °C	Device performance limited to max. 80 %*.	orange (flashing)	off = stand-by green = cooling orange = heating	freely configurable**	Check heating output, replace filter mat if necessary, ambient temperature too low.
Undertemperature: Interior temperature < Heating alarm temperature	Device is heating.	orange (illuminated)	orange (illuminated)	switched	
Exterior fan top or bottom blocked/defective	Remaining intact exterior fan is operating at 100%.	orange (flashing)	off = stand-by green = cooling orange = heating	switched	Check whether fan is blocked. Replace the device if necessary.
Interior fan blocked/defective or exterior fan blocked/defective	Device offline.	red (illuminated)	–	switched	Replace the device.
Power supply incorrect (< 20 V or > 28 V)	Device performance limited to max. 80%*.	orange (flashing)	off = stand-by green = cooling orange = heating	switched	Check power supply, use a transformer if necessary.
USB operating mode	Device offline. Sensors are being monitored.	red (illuminated)	red (illuminated)	switched	–

Tab. 6: Overview of system messages

System message	Description	LEDs		Alarm relay	Action
		Status	Function		
Test mode	Device carries out a self-test when activated.	green (illuminated)	green/red (illuminated)	switched	–
Slave operating mode	Master-slave operating mode	orange/ green (flashing)	off = stand-by green = cooling orange = heating	not switched	–

* Restricted mode to protect the device
** For these messages, the alarm relay may be activated or deactivated.
To do so, go to the "Configuration" tab and check/uncheck the box for "Limit status as alarm".

Tab. 6: Overview of system messages

LED flash interval

Status or function LED is illuminated:

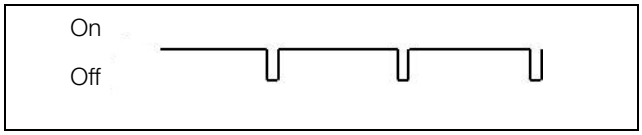

Status LED flashing

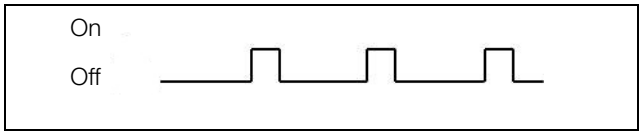

Status LED blinking

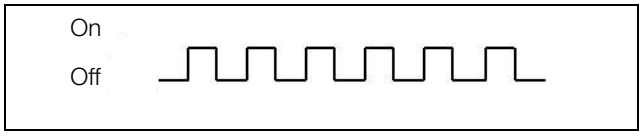

System messages can also be retrieved via an integral floating contact on the connection terminal of the Rittal Thermoelectric Cooler (see wiring diagram in section 4.5.3 "Connecting the power supply"):

– Terminal 1: NO (normally open)
– Terminal 2: NC (normally closed)
– Terminal 3: C (connection between voltage supply and system message relay)

The NC and NO definitions refer to the de-energised state. As soon as power is applied to the cooling unit, the system message relay picks up, so that the relay contacts change status (contact 1 – 3 closed; contact 2 – 3 open).

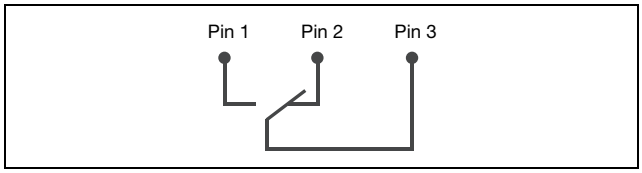

Fig. 24: Assignment of the changeover contact (in the de-energised state)

6.6 Setting the master-slave identifier

When several Thermoelectric Coolers are linked together (up to a maximum of 5), one of the units must be defined as the "master" and the others as "slaves" (see section 6.4 "Editable parameters").

Note:
The PC software is only capable of reading the system messages from an individual unit in the master-slave network. To this end, each unit must be connected and read individually via a USB.

6.7 Temperature logging

The "Temperature logging" tab allows you to log the ambient and enclosure interior temperature. The data is stored in a .csv file and may be edited directly in Microsoft Excel.

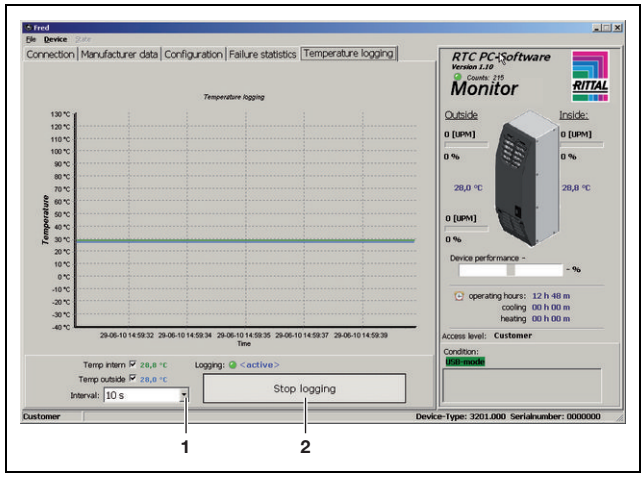

Fig. 25: Start/end temperature logging

Key

1 Setting the measurement interval
2 Start or end logging

Note:
A USB connection must be present throughout the entire measurement process.

EN

6.8 Accept configuration

Once made, the configuration may be transferred to other devices.

- In the task bar, click on "File" then "Save configuration as".
- Choose a file name and save the file.
- Connect the Rittal Thermoelectric Cooler you wish to configure to the PC.
- In the task bar, click on "File" then "Open configuration".
- Select the file you saved previously.
- Click on the "Configuration" tab and then "Apply".

7 Inspection and maintenance

Warning!
Prior to any cleaning or maintenance work, the power to the climate control unit must be disconnected!

Caution!
Never use flammable liquids for cleaning the unit.

The Rittal Thermoelectric Cooler is low-maintenance.

If the Rittal Thermoelectric Cooler is used in ambient air subject to dust, dust can accumulate in the area of the air inlet and outlet openings and on the heat transferring surfaces of the Peltier element. This can cause a reduction of the air flow in the device and thus a gradually reducing cooling/heating capacity.

To remove the dust, withdraw the louvred grille at the device front. Blow compressed air through the air inlet and outlet openings of the climate control unit.

If the Peltier climate control unit is equipped with a device filter, it must be cleaned or replaced regularly. The filter mat can be cleaned by washing, dusting or blowing with compressed air. The high-quality filter material used for the mat means the cleaning does not impair the filter-technical properties and the form stability. The fire class remains unchanged!

Note:
When the filter is replaced, use only filter materials approved for the Rittal Thermoelectric Cooler.
The dust collecting efficiency and dust storage capacity of the chosen filter equipment is matched to the rated flow speed of the climate control unit in the external air circuit and so guarantees an excellent dust filtering for a high useful cooling output.

8 Disposal

To ensure the material reuse of the recyclable packaging materials, they must be delivered to the local collection sites.

The climate control unit must be delivered to a waste management service provider that ensures the correct reuse of the recyclable parts and the proper disposal of the rest.



9 Accessories

Optional accessories:

– Filter mat
  (Model No. SK 3201.050)
– Condensate hose Ø = 6 mm
  (Model No. SK 3301.606)
– Master-slave adaptor RJ45
  (Model No. SK 3201.070)

EN

10 Technical details

- Observe the mains connection data (voltage and frequency) as per the rating plate.
- Observe the pre-fuse as per the specifications on the rating plate.

10.1 Technical specifications

	Model No.	
	3201.200	**3201.300**
Rated voltage [V Hz]	100 – 240, 1~, 50/60	24 (DC)
Rated current [A]	1.9	4.5
Start-up current [A]	6.4	4.5
Pre-fuse T [A]	4	10.0
Motor circuit-breaker [A]	–	–
Transformer circuit-breaker [A]	–	–
Miniature circuit-breaker or gG slow fuse (T)	■	■
Total cooling output P_C to DIN EN 14511 L 35 L 35 [kW]	0.08	0.08
Total cooling output P_C to DIN EN 14511 L 35 L 30 [kW]	0.1	0.1
Heating output P_H L10 L 10 [kW]	0.08	0.08
Power consumption P_{el} to DIN EN 14511 L 35 L 35 [kW]	0.1	0.083
Energy efficiency ratio (EER) 50 Hz L 35 L 35	0.80 max.	0.90 max.
Operating temperature [°C]	-30…+55	
Setting range – cooling/heating [°C]	+5…+55 / -10…+20	
Noise level [dB (A)]	≤ 63	
Protection category according to IEC 60 529		
– Internal circuit	IP 54	
– External circuit	IP 34	
Dimensions (W x H x D) [mm]	125 x 400 x 155	
Weight [kg]	3.3	2.6

Tab. 7: Technical specifications

EN

10.2 Performance diagrams

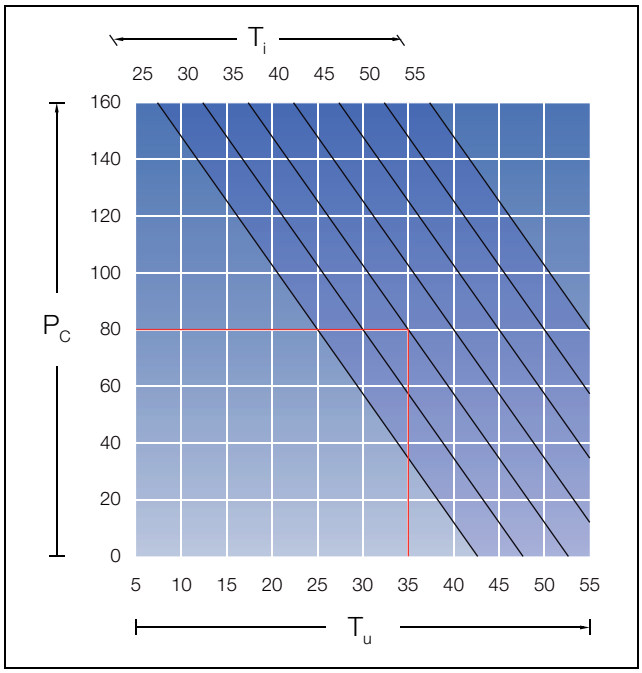

Fig. 26: Cooling output characteristic curve for full internal mounting

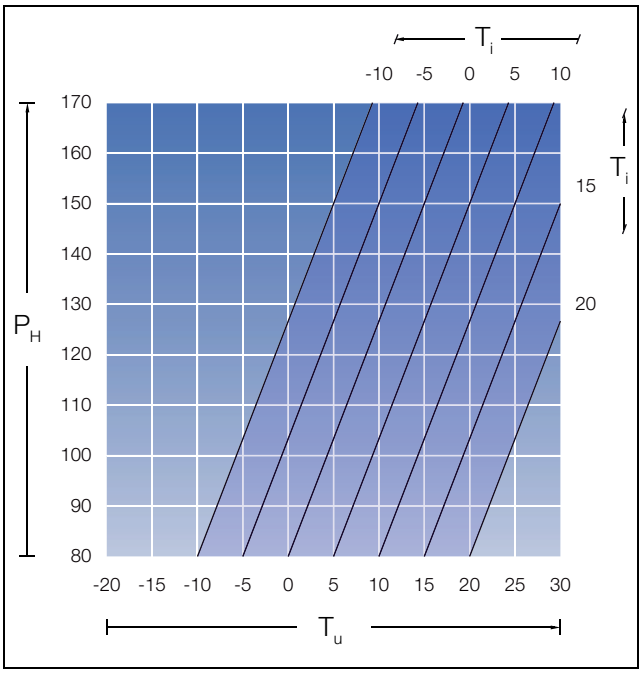

Fig. 27: Heating output characteristic curve for full internal mounting

11 Appendix

11.1 Cut-out and hole sizes

11.1.1 Dimensions for external mounting

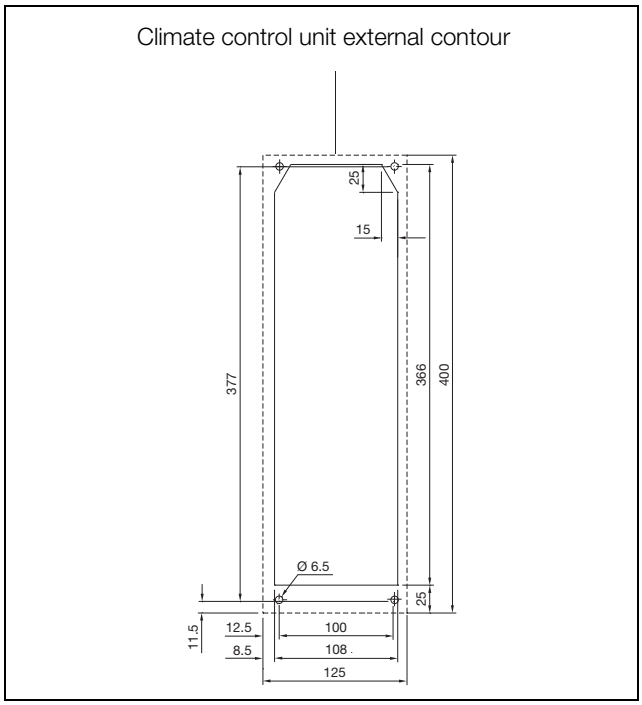

Fig. 28: Mounting cut-out and hole sizes for external mounting

11.1.2 Dimensions for full internal mounting

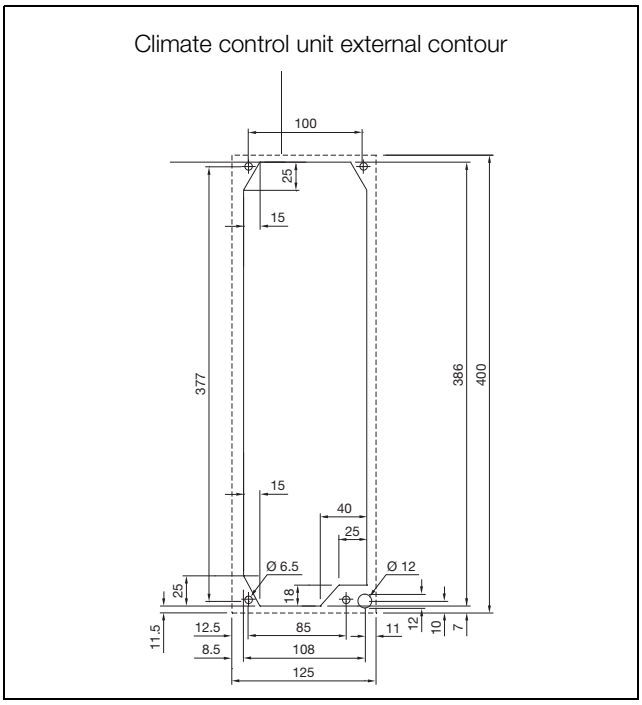

Fig. 29: Mounting cut-out and hole sizes for internal mounting (full internal mounting)

11.2 Declaration of conformity

Vereinfachte EU-Konformitätserklärung / Simplified EU Declaration of Conformity

Wir
We

Rittal GmbH & Co. KG, Auf dem Stützelberg, 35745 Herborn

erklären hiermit, dass die Produkte
hereby declare that the products

Thermoelectric Cooler

(Artikel gemäß dieser Anleitung / Types referenced in this manual)

folgenden Richtlinien entsprechen / conform to the following directives:

Maschinenrichtlinie 2006/42/EG – machinery directive 2006/42/EC
EMV-Richtlinie 2014/30/EU – EMC directive 2014/30/EU
RoHS-Richtlinie 2011/65/EU – RoHS directive 2011/65/EU

Bei einer nicht mit uns abgestimmten Änderung der Maschine verliert diese EU-Konformitätserklärung ihre Gültigkeit.
This EU declaration of conformity shall become null and void when the assembly is subjected to any modification that has not met with our approval.

Die vollständige und unterschriebene EU-Konformitätserklärung erhalten Sie auf der Produktseite der Rittal Homepage www.rittal.com.
The complete and signed EU declaration of conformity is available at the product site of Rittal homepage www.rittal.com.

SCHALTSCHRÄNKE STROMVERTEILUNG KLIMATISIERUNG IT-INFRASTRUKTUR SOFTWARE & SERVICE

FRIEDHELM LOH GROUP

Rittal – The System.

Faster – better – everywhere.

- Enclosures
- Power Distribution
- Climate Control
- IT Infrastructure
- Software & Services

You can find the contact details of all
Rittal companies throughout the world here.

www.rittal.com/contact

10.2019 / D-0000-00001939-00-EN

RITTAL GmbH & Co. KG
Auf dem Stuetzelberg · 35745 Herborn · Germany
Phone +49 2772 505-0
E-mail: info@rittal.de · www.rittal.com