The **ATC 655** timer is an electronic control that will retrofit most round case electromechanical timers. the control performs the same timing modes (ON-Delay or Reverse Start Delay) as electromechanical units, and it is capable of timing ranges from 1 millisecond to 199 hours, 59 minutes. On the bottom inside of the control are DIP switches which can be set, in seconds, to establish the timing mode and time range. Our unit will plug into competitive mounted cases without wiring changes in most instances. Remove the electromechanical timer, set ours, plug it into the electromechanical timer case and you're ready to run. DIP switch setting instructions for electromechanical timers are supplied with 655 installation instructions.



DIMENSIONS (INCHES/MILLIMETERS)

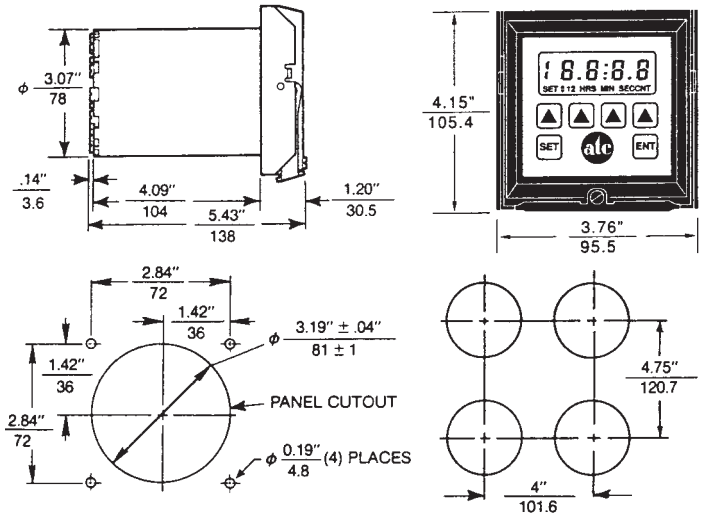

model 600-3-3950 surface mounting bracket

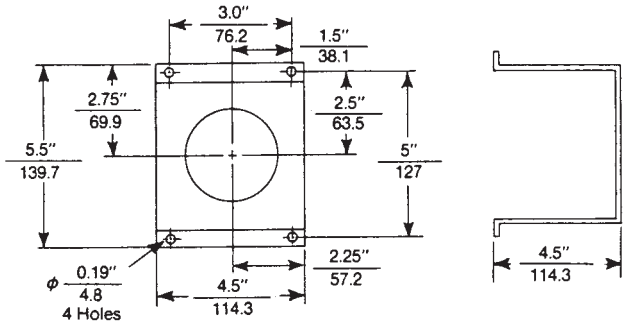

WIRING

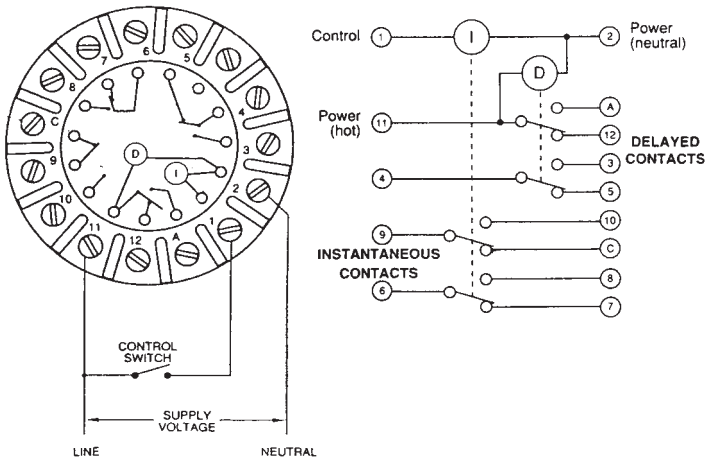

c UL us
E205980

Panel Mounted Digital Timer

- Direct Replacement For Electromechanical Timers
- Two Timing Modes
- Data Retention with EEPROM Memory or Battery (included with timer).
- Five Time Ranges
- Simple Keypad Time Setting
- Sealed Faceplate
- Keypad Lockout of Time Setting
- Easy Programming
- Instantaneous Contacts Directly Track the Control Input

ORDERING INFORMATION

MODEL NUMBER	DESCRIPTION
655-8-4000	Timer 120VAC W/EEPROM Memory
655-8-4001	Timer 240VAC W/EEPROM Memory
655-8-5000	Timer 120 VAC W/Battery Memory
655-8-5001	Timer 240 VAC W/Battery Memory
600-3-3950	Base Mounting Bracket
651-3-0128	Mounting Gasket, 1/8" Thick (Included with Timer)
651-3-0129	Mounting Gasket, 1/4" Thick (Included with Timer)

Replacement lithium batteries - Old ATC Part #652-3-0130 is not available. Use TADIRAN#TL-5902/S SAFT, #LS14250 or EAGLE-PICHER #PT-2150 from most electrical distributers.

DIP SWITCH SETTING GUIDE

Eagle Part Number	655 Switch Settings						
	1	2	3	4	5	6	7
HP50A6	0	0	X	0	0	0	0
HP50A601	0	0	X	0	0	X	0
HP51A6	0	0	X	0	0	0	0
HP51A601	0	0	X	0	0	X	0
HP52A6	0	X	0	0	0	0	0
HP52A601	0	X	0	0	0	X	0
HP53A6	0	X	X	0	0	0	0
HP53A601	0	X	X	0	0	X	0
HP54A6	0	X	X	0	0	0	0
HP54A601	0	X	X	0	0	X	0
HP55A6	0	X	X	0	0	0	0
HP55A601	0	X	X	0	0	X	0
HP56A6	0	X	X	0	0	0	0
HP56A601	0	X	X	0	0	X	0
HP57A6	0	X	X	0	0	0	0
HP57A601	0	X	X	0	0	X	0
HP58A6	X	0	0	0	0	0	0
HP58A601	X	0	0	0	0	X	0
HP59A6	X	0	0	0	0	0	0
HP59A601	X	0	0	0	0	X	0
HP510A6	X	0	0	0	0	0	0
HP510A601	X	0	0	0	0	X	0
HP511A6	X	0	0	0	0	0	0
HP511A601	X	0	0	0	0	X	0
HP514A6	0	0	X	0	0	0	0
HP514A601	0	0	X	0	0	X	0
HP515A6	0	0	X	0	0	0	0
HP515A601	0	0	X	0	0	X	0
HP517A6	0	0	X	0	0	0	0
HP517A601	0	0	X	0	0	X	0
HP518A6	0	X	X	0	0	0	0
HP518A601	0	X	X	0	0	X	0

DIP SWITCH DEFINITIONS

0=OFF X=ON

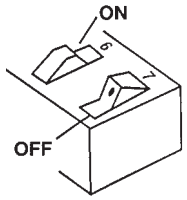

1.Determine Eagle Model Number: To determine the Model Number of the Eagle HP5; remove timer from case by loosening the screw at the lower front of the timer face and lift the mounting handle and pull the timer from the case. The model number will be on the left side of the timer. Some models will have a metal plate with the part number, others have a label with the number in that same area.

2. Remove Control: Remove the 655 control from its case by loosening the screw at the bottom of the chrome handle, lifting the handle up and pulling the control forward.

3. Determine Switch Settings: Determine how the 655 DIP switches should be set to retrofit that particular HP5 model using the DIP Switch Setting Guide.

4. Set Time Base: Hold the control to expose the DIP switch assembly on the bottom of unit and set the time base you require on switches 1, 2, and 3.

5. Set Timing Mode: To select the timing mode required, set switches 5, 6, and 7 on the switch assembly as recommended by the DIP Switch Setting Guide.

6. Set Preset Time: Position the 655 control so that you are looking at the keypad on the front of the unit. Push the SET button and four dashes will appear. Depress the SET button a second time and word SET and four zeros will appear. To enter the preset time desired, press the ENT button and preset number will flash seven and go blank. The Model 655 timer is now ready to operate and can be returned to its case or directly into the case of the HP5 that it is replacing. To check or change the preset time; push the SET button and time setting will be displayed. To change the preset time follow the same procedure as indicated previously in this paragraph. When you have completed setting a new preset time, push the ENT button. The preset time can be changed when the 655 is running a cycle or "on the fly". That run cycle will be completed based on the preset at the beginning of the cycle. The new preset will control the next cycle.

NOTE: If the "SET" button is pushed to review or change the preset time, the ENT button must be pushed to return the control to the operating mode.

*NOTE: Dipswitch #8 inactive

SPECIFICATIONS (ALL MODELS)

TIMING RANGES	0.001 SEC to 19.999 SEC 0.01 SEC to 199.99 SEC 0.1 SEC to 1999.9 SEC 1 SEC to 199 MIN 59 SEC 1 MIN to 199 Hr. 59 MIN
TIMING MODES	ON-Delay or Reverse Start Delay
RESET TIME	25 mSEC
CONTROL VOLTAGE INITIATE TIME	25 mSEC
MEMORY	4000/4001 - EEPROM 5000/5001 Lithium Battery - Replaceable
POWER CONSUMPTION	5.2VA
TIME SETTING	Front Panel Keypad
TIME REPEAT ACCURACY	± .005 SEC
DISPLAY	LCD: 4-1/2 Digit, 7/16" High
RELAY MECHANICAL LIFE	50,000,000 Operations
INSTANTANEOUS RELAY OUTPUT	7 Amps Resistive, 240 VAC 2 N.O.
TIMED RELAY OUTPUT	7 Amps Resistive, 240 VAC 2 N.O., 2 N.C. Contacts
SHORT CIRCUIT PROTECTION	1/4 Amp Fuse
TEMPERATURE RATING	32° to 140°F (0° to 60°C)
OPERATING POWER	120 or 240 VAC, +10%, -20%, 50/60 Hz.
TRANSIENT VOLTAGE PROTECTION	Metal Oxide Varistor
NEMA RATING	NEMA 12
TERMINALS	Screw Terminals
MOUNTING	Plug In Case
WEIGHT	Net: 25 oz. Shipping: 30 oz.